ScandiNova

M100 TRAINING

Users meeting 2020

Klas Elmquist

M100

BASIC SCHEMATIC

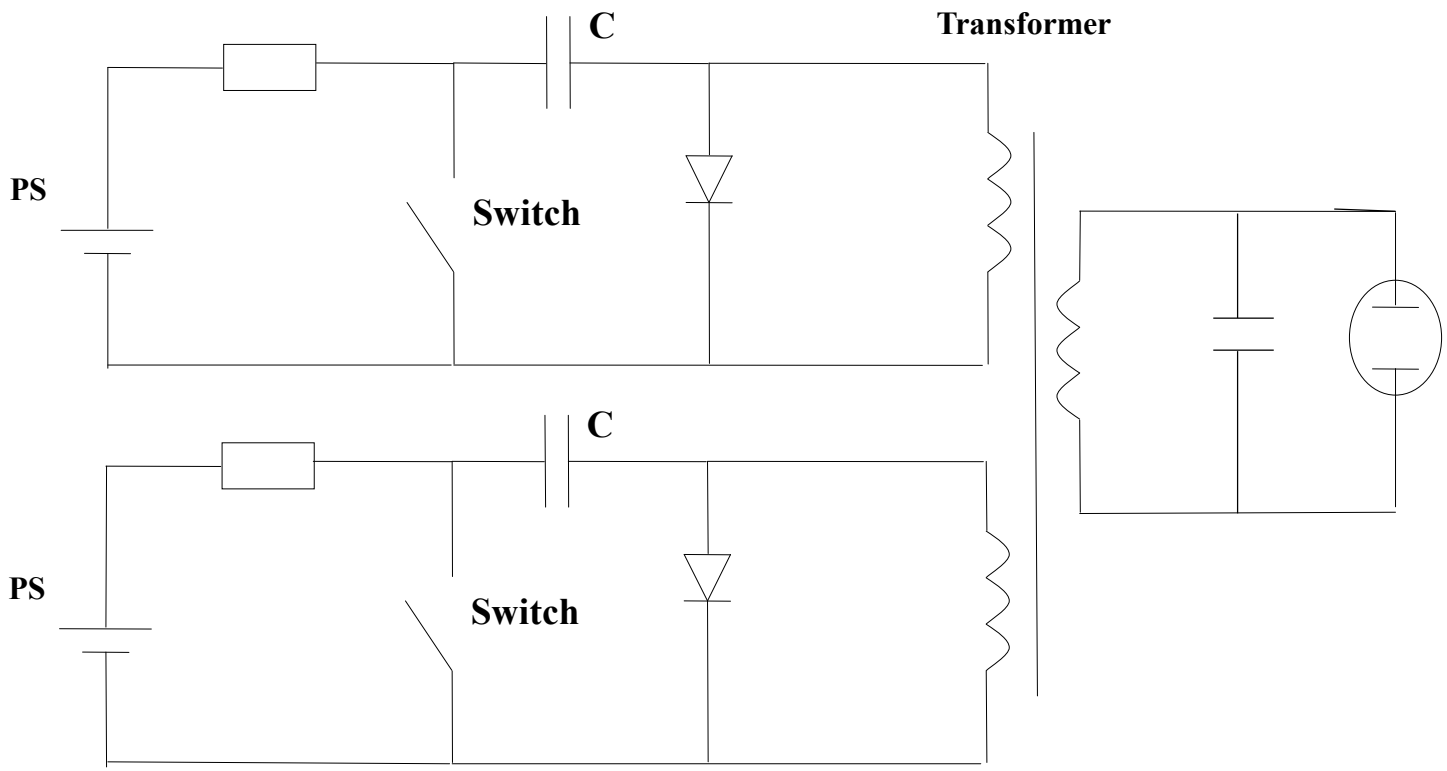

BASIC SCHEMATIC

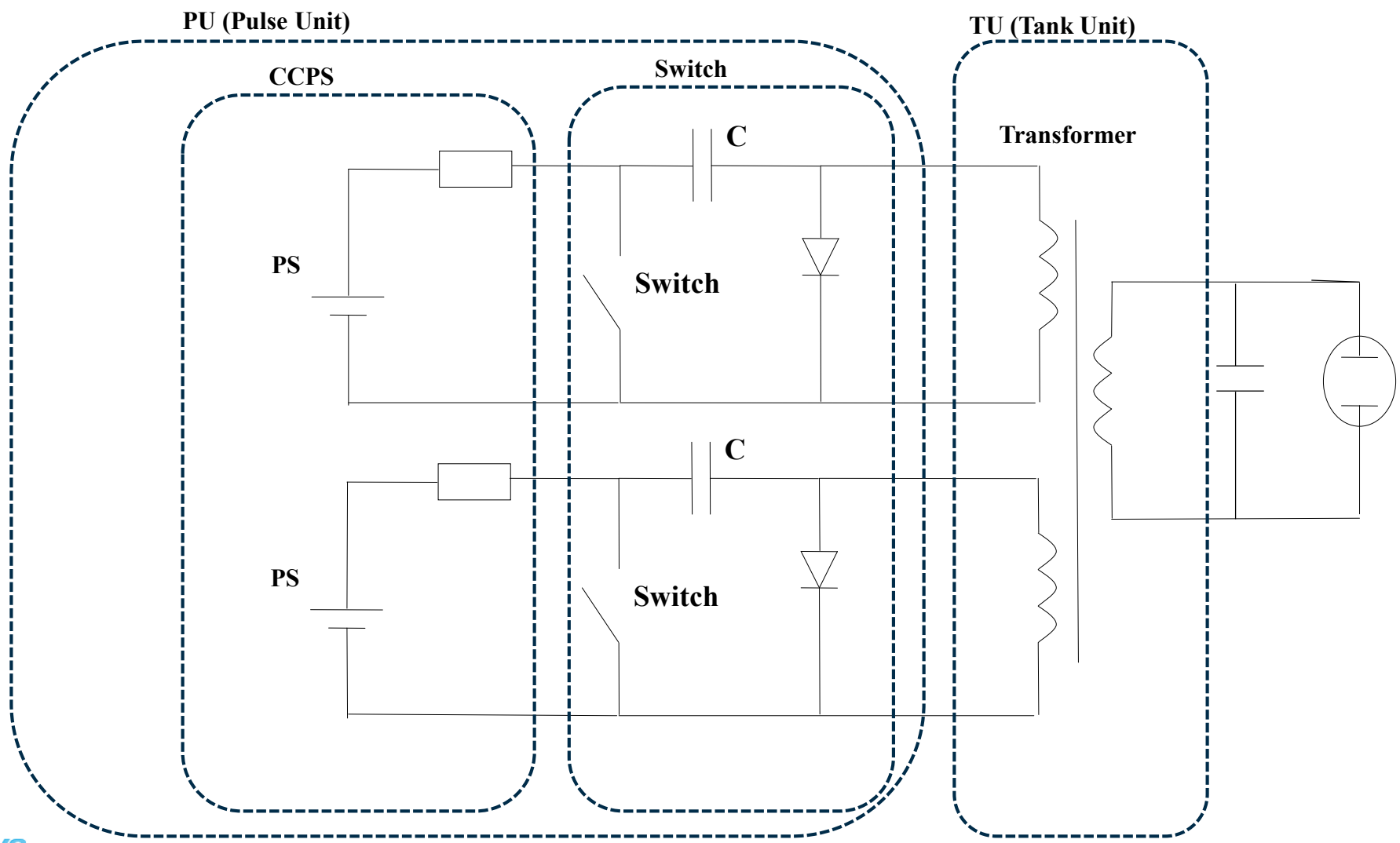

Pulse Unit

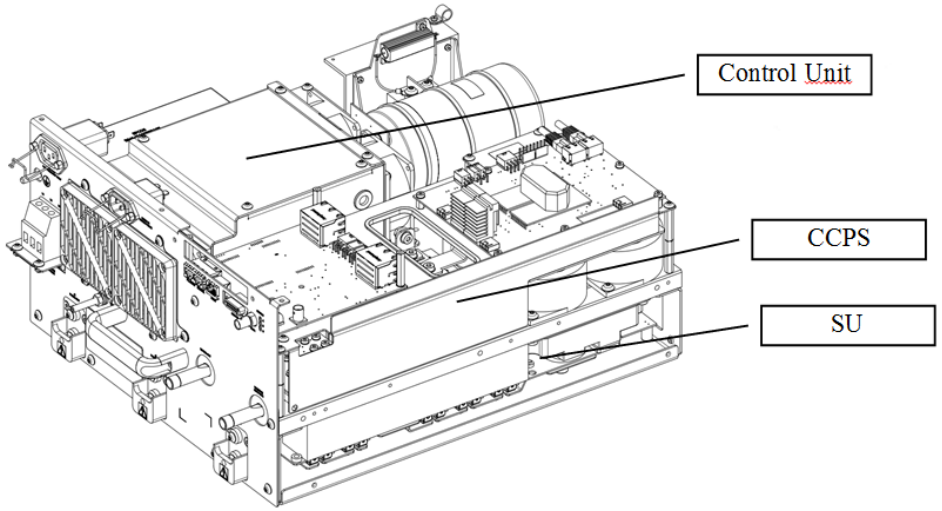

Tank Unit

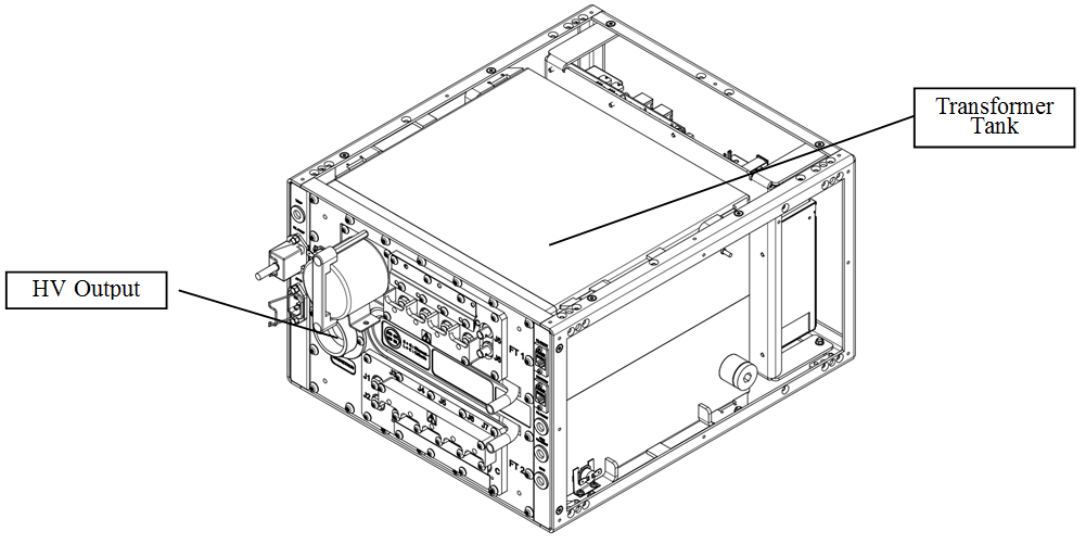

CCPS

CAPACITOR
CHARGER
POWER
SUPPLY

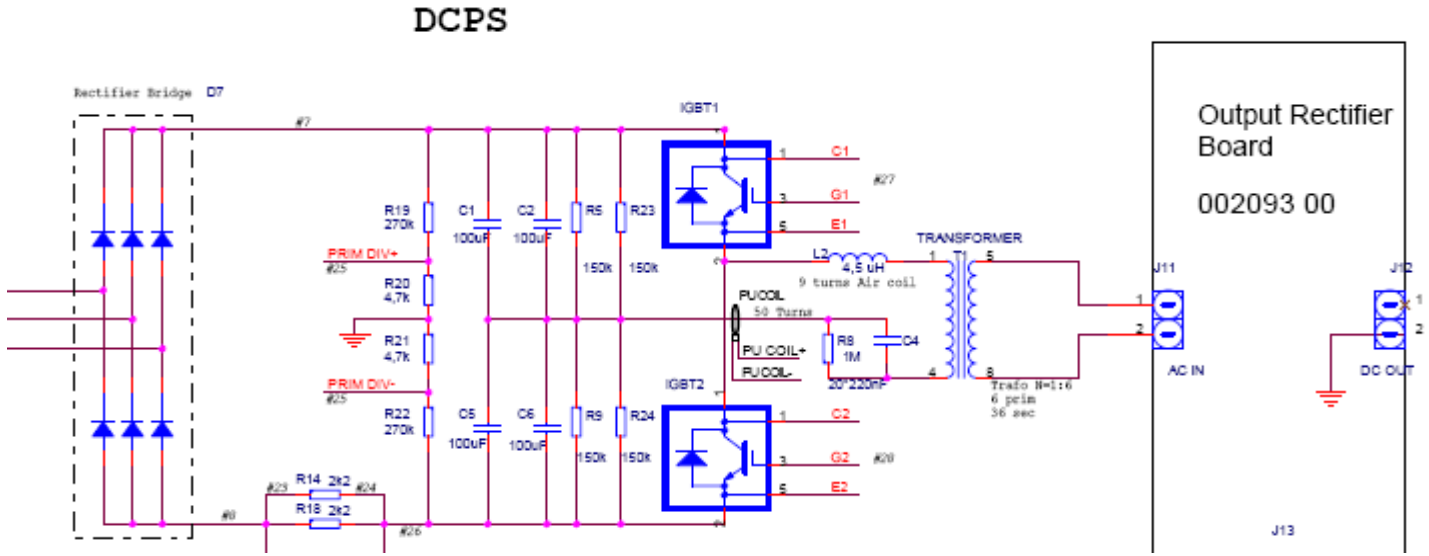

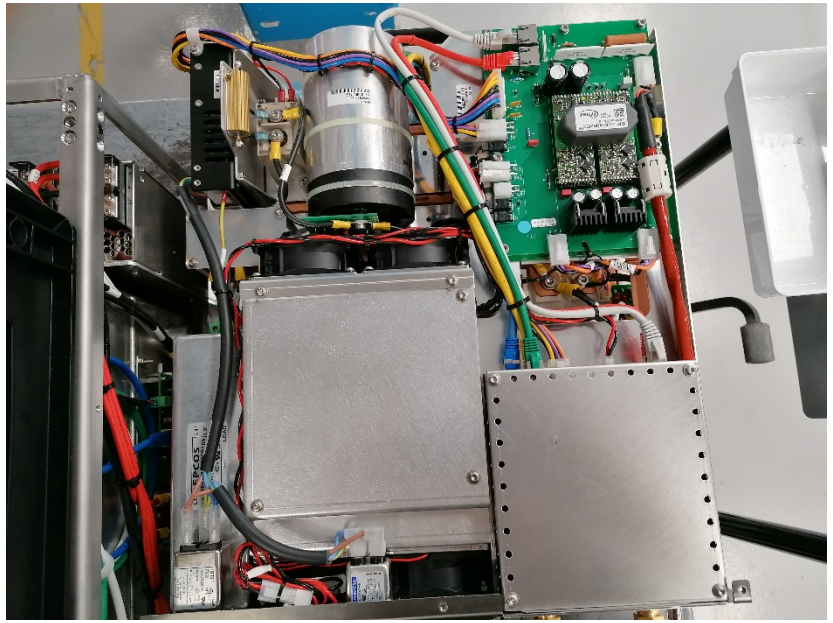

CCPS FEATURES

- High stability. Patented features
- Compact design
- Interlocks
    - IGBT temp
    - Soft start
    - IGBT failure
    - HF Transformer cooling
    - Over current
    - Over charging
    - Etc

SWITCH

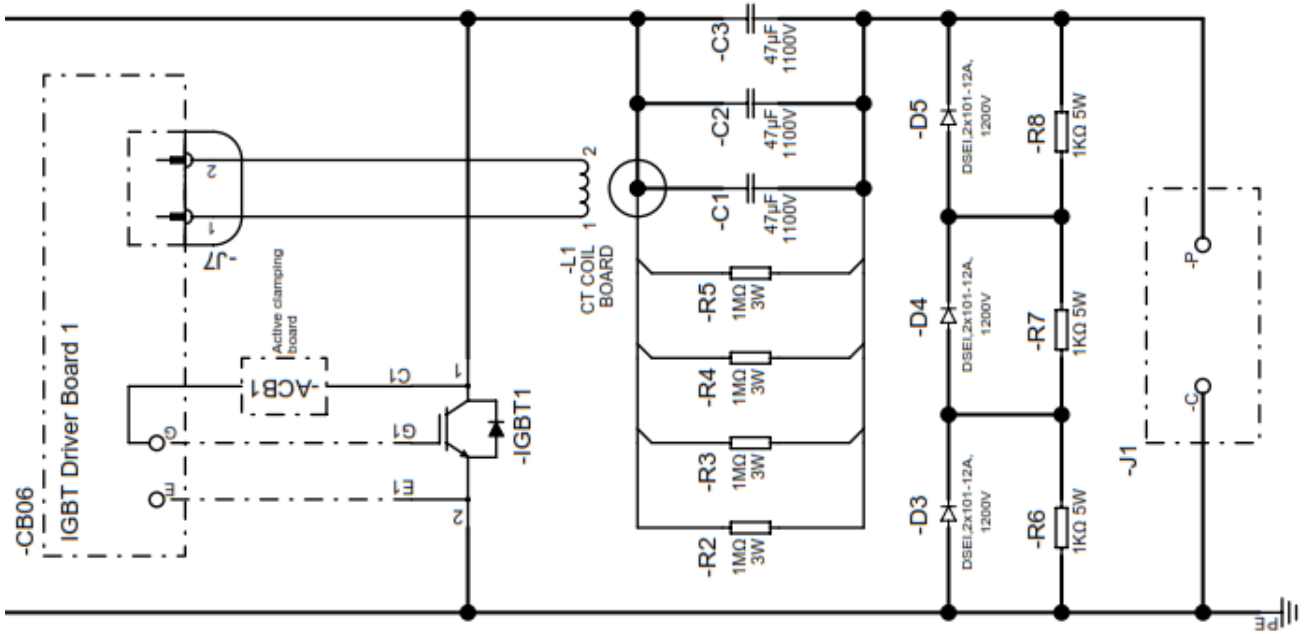
-CB06
IGBT Driver Board 1
-J7
Active clamping board
-ACB1
-IGBT1
-L1
CT COIL BOARD
-C1
-C2
-C3
47µF 1100V
-R2
-R3
-R4
-R5
1MΩ 3W
-D3
-D4
-D5
DSEI2x101-12A, 1200V
-R6
-R7
-R8
1KΩ 5W
-J1
-P
-C
PE

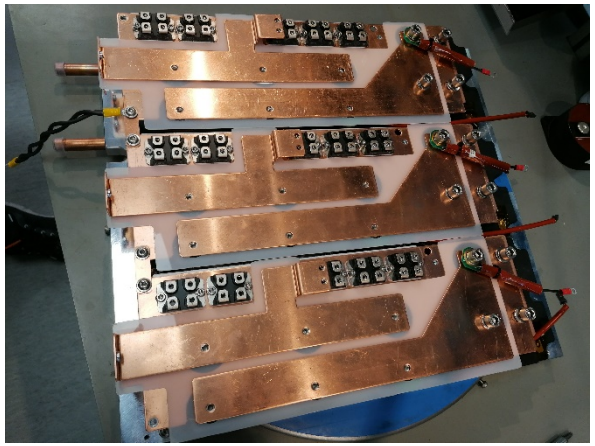

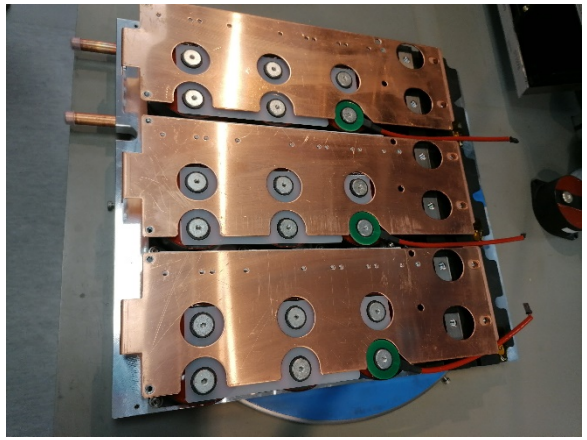

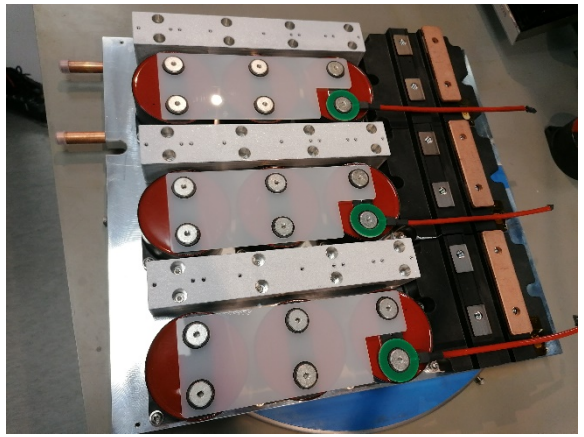

SWITCH UNIT FEATURES

- 3 switches
- Individual over-current (arc) interlock.
- Temperature interlock on heatsink

TANK UNIT FUNCTIONS

- CT
- CVD
- Transformer
- Choke
- Water Cooling
- Interlocks
- Oil expansion bladder
- Filament power supply

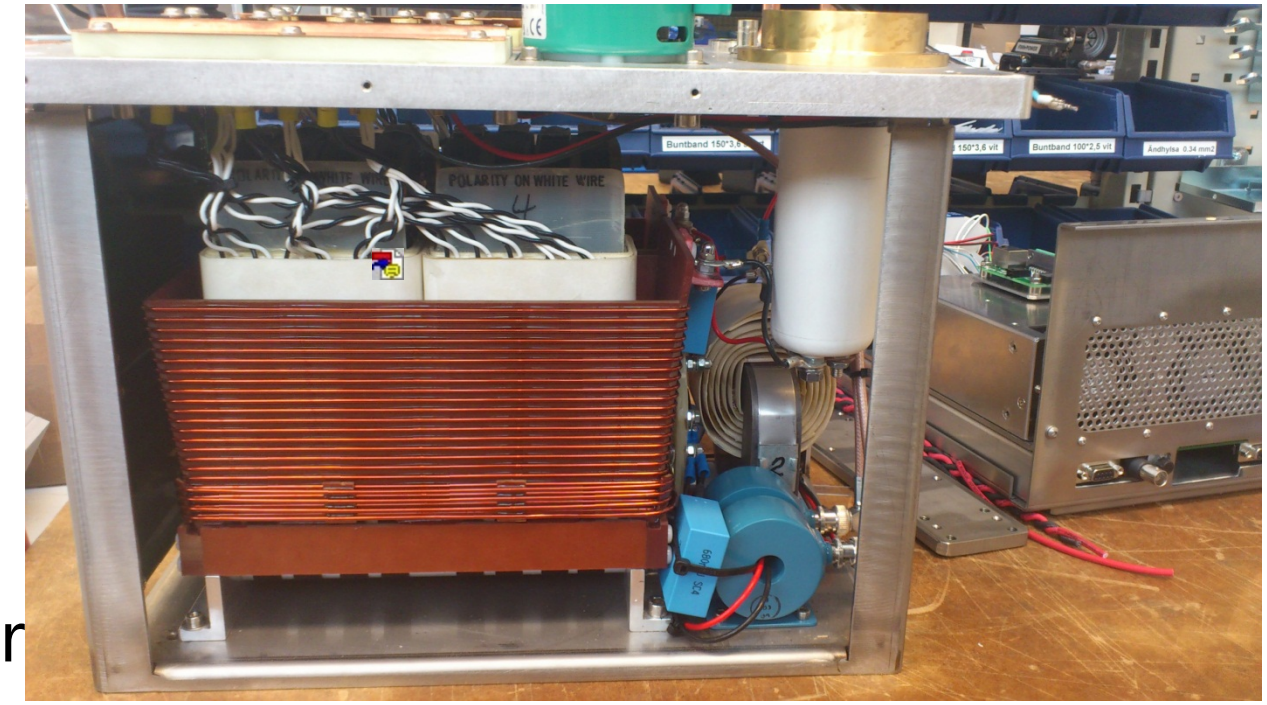

TRANSFORMER

- Several primary windings
- Two secondary widings
- Approx 1:40 ratio

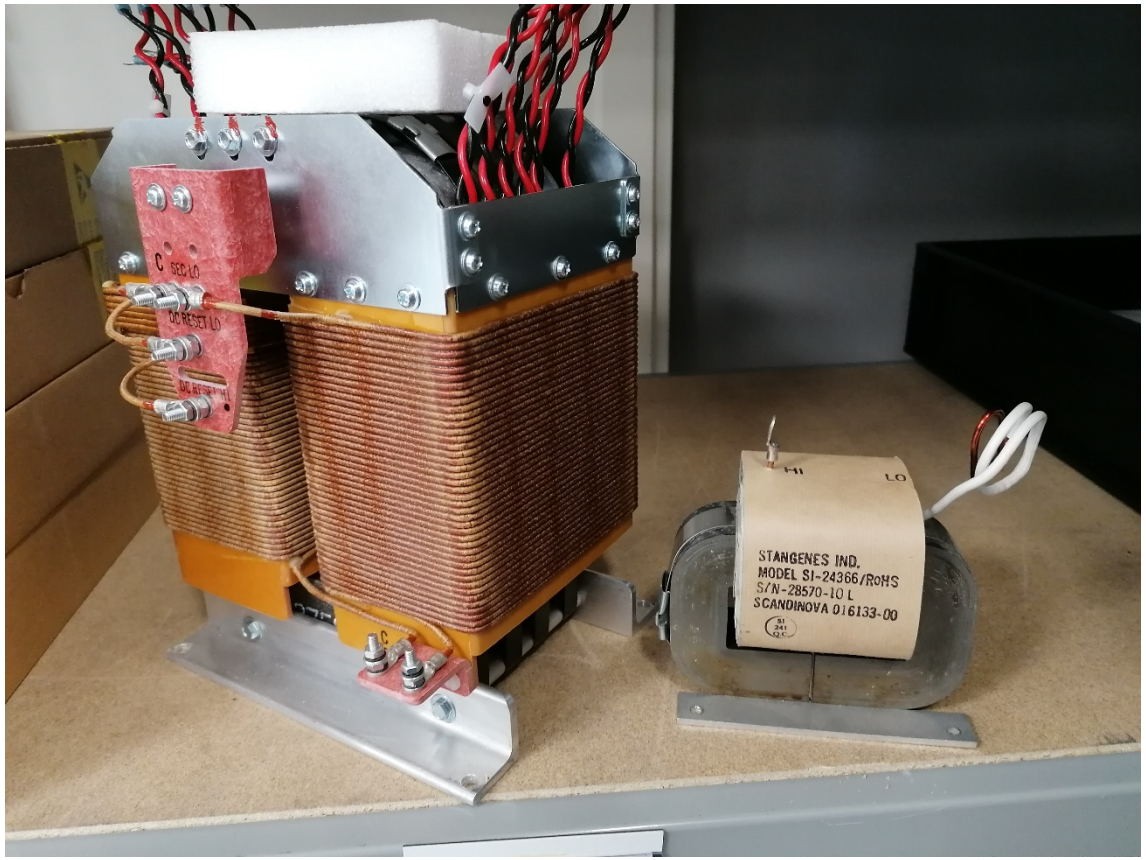

CT AND CVD

- CT
  - Absolute measurement
  - On secondary low voltage side
  - May have overshoot
- CVD
  - Relative amplitude
  - Good shape
  - Fragile signal

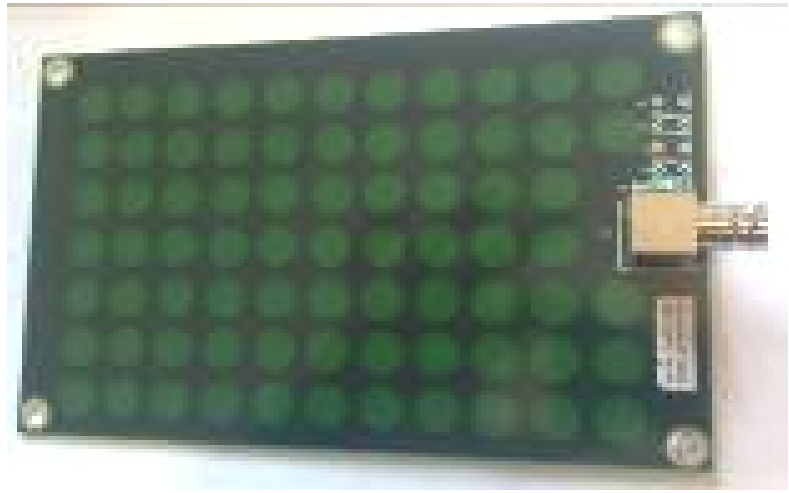

FILAMENT

- Grounded on positive side
- No mooding because DC current
- Voltage or Current control
- Capacitors ensure symmetry of transformer

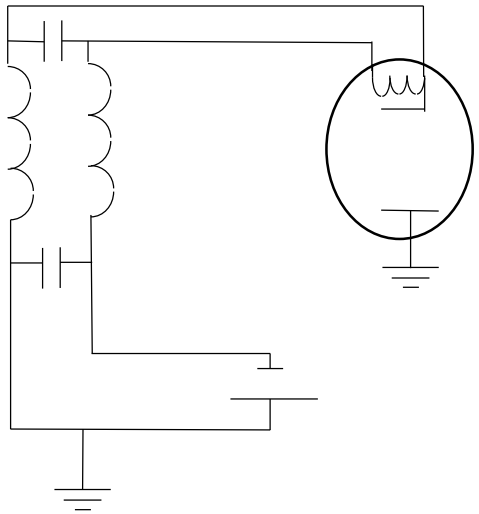

CORE BIAS

- Ensures better use of the transformer core
- The choke is protecting the bias power supply

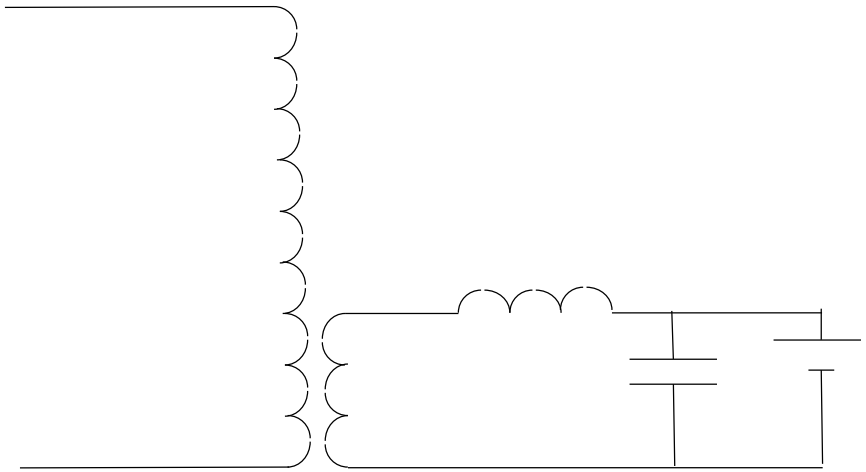

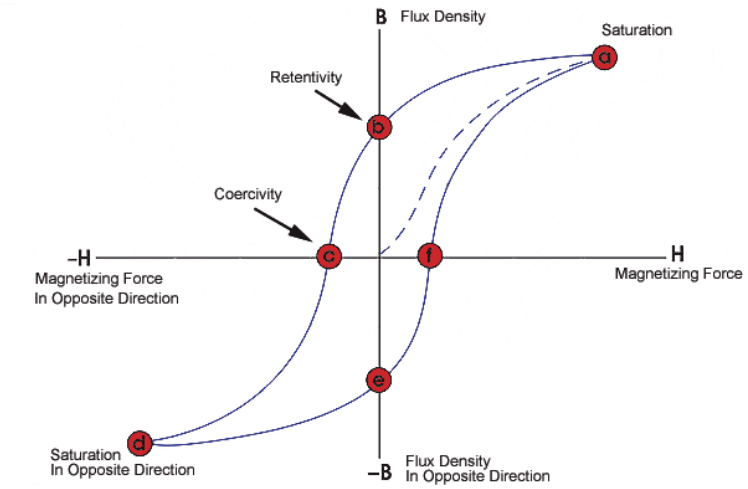

Magnetron:
Magnetic field change

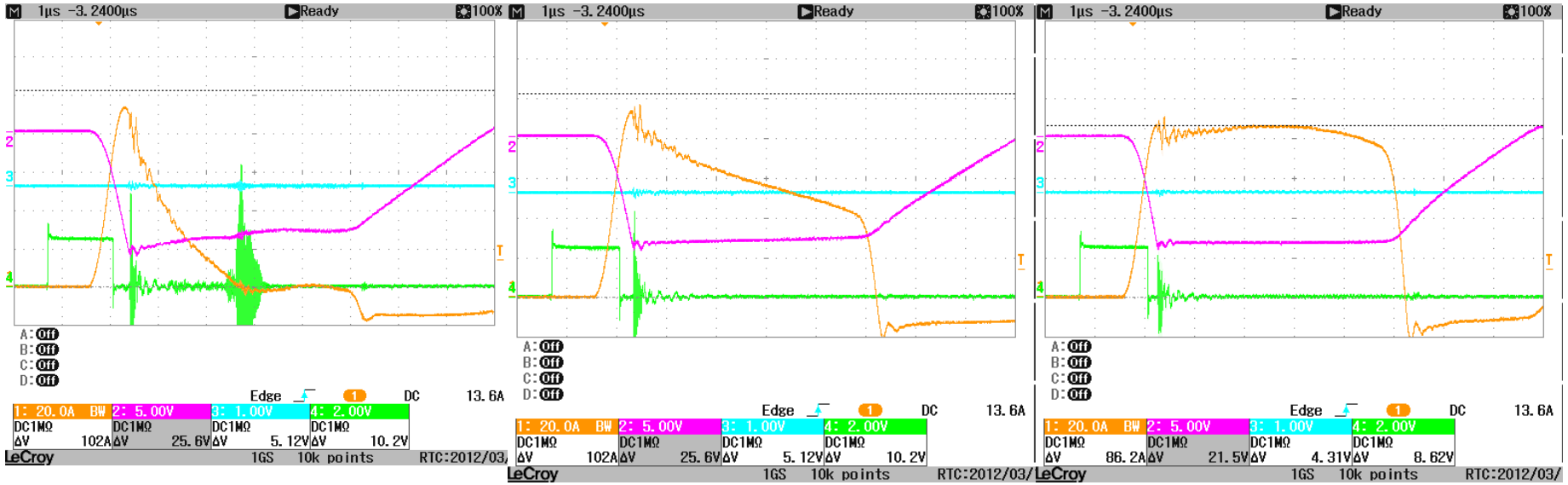

Magetron:
Voltage change

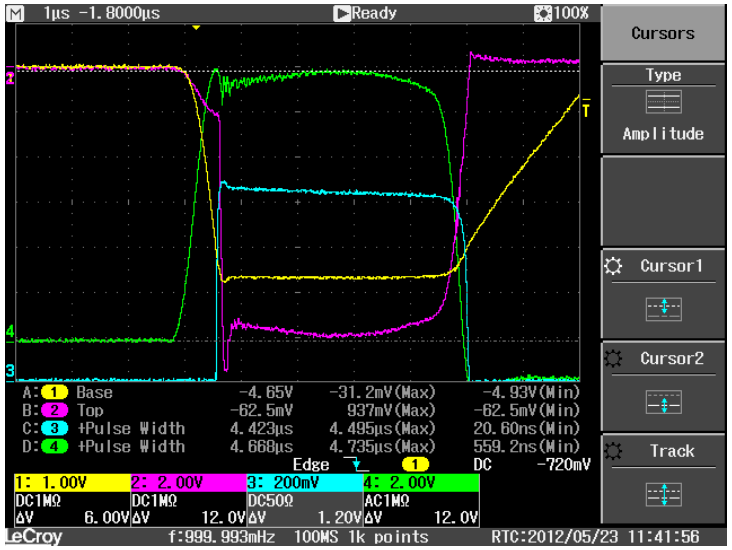

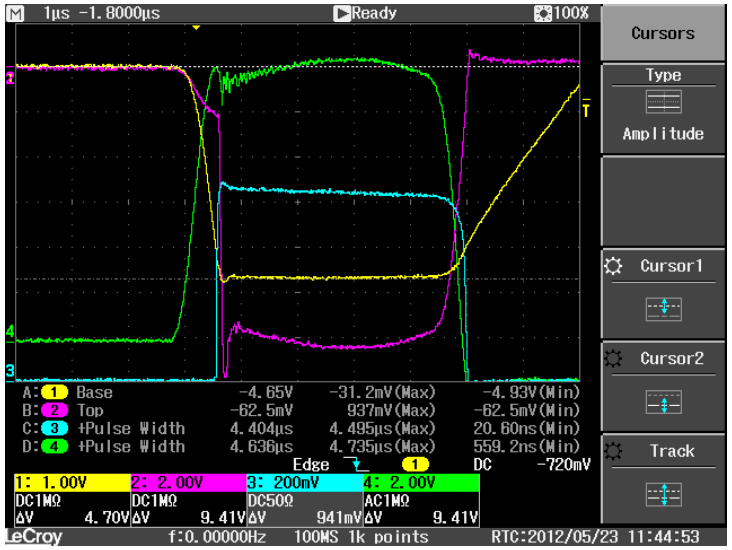

SAFETY

- Covers
- HV only in the tank and cable
  - Triggered
- 1400 V level isolation
- 1400 V bleeding
- Still, be careful.

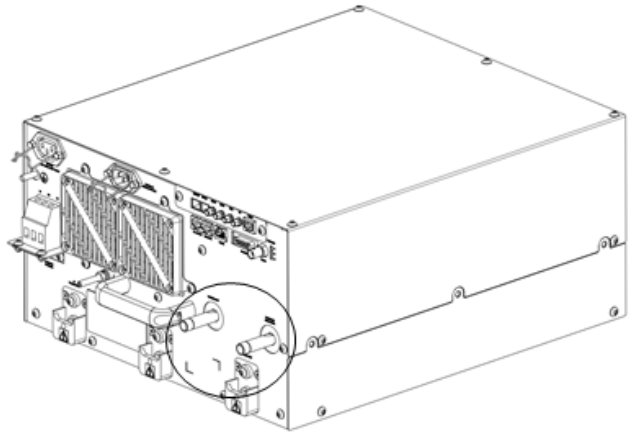

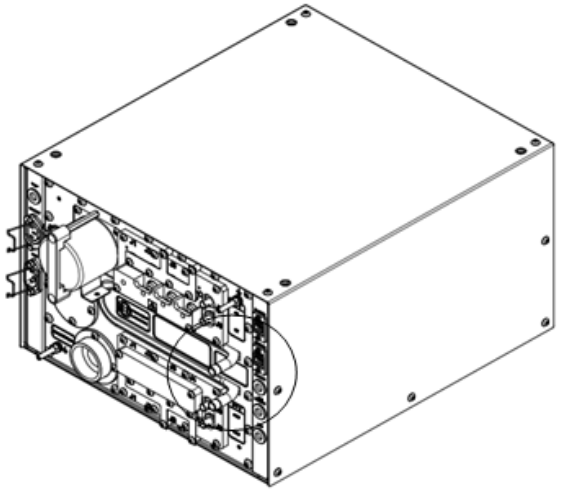

PEAKING CAPACITOR

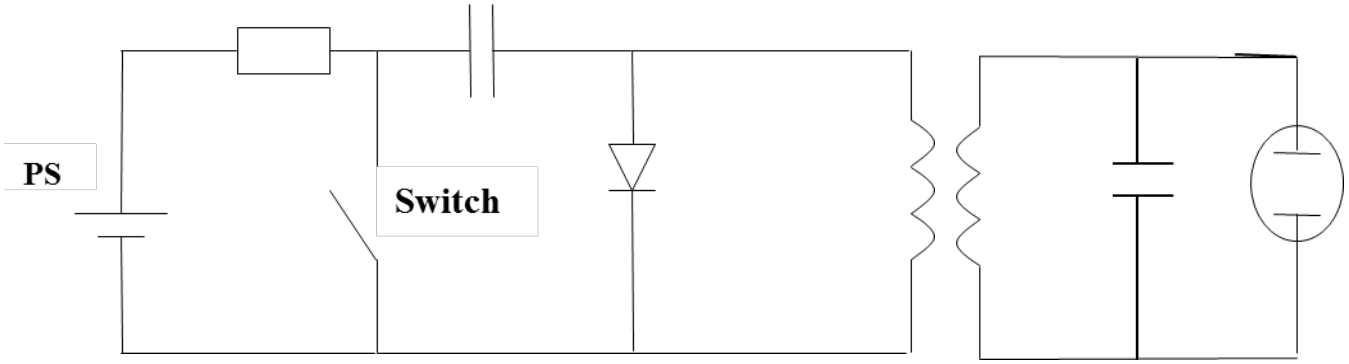

- Adaptation to the magnetron need for current and the system inductance
- Could be replaced with cable inductance.

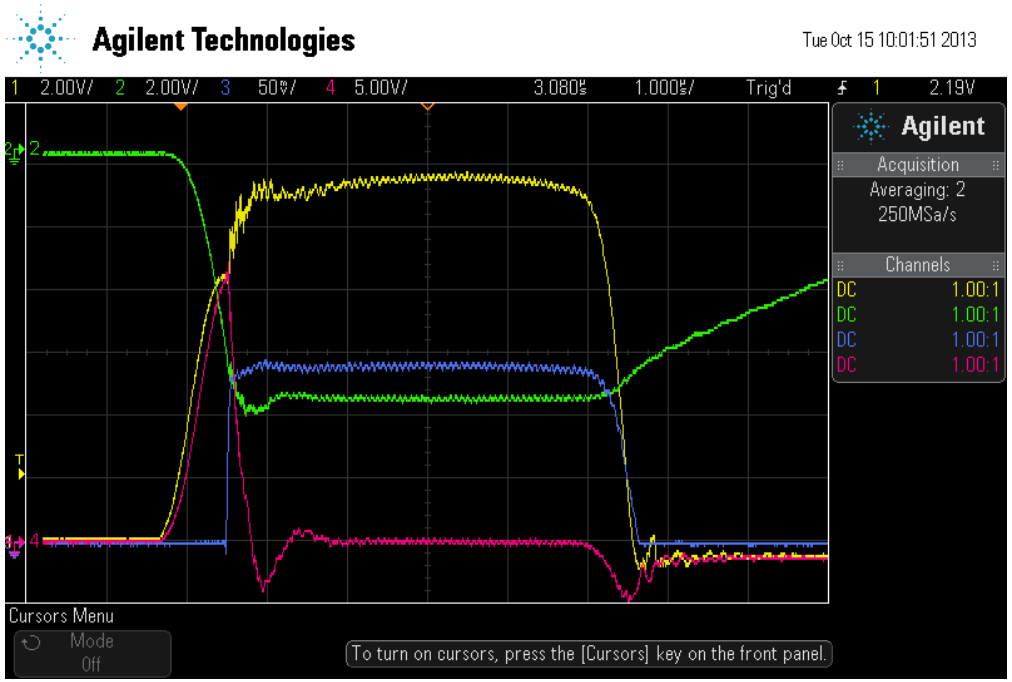

DUAL ENERGY CONFIGURATION

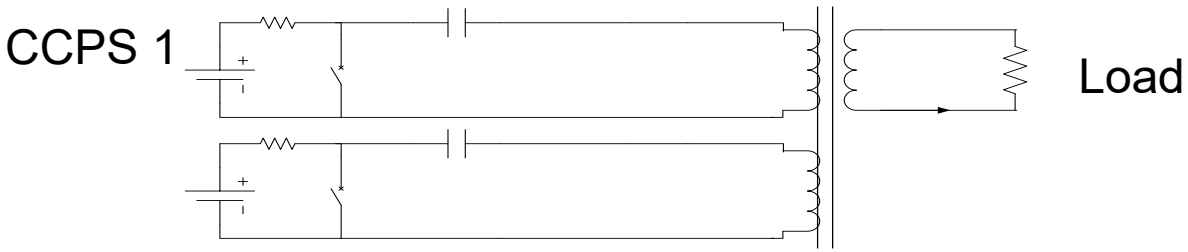

Figure 3 High Energy Output Current for Magnetron.

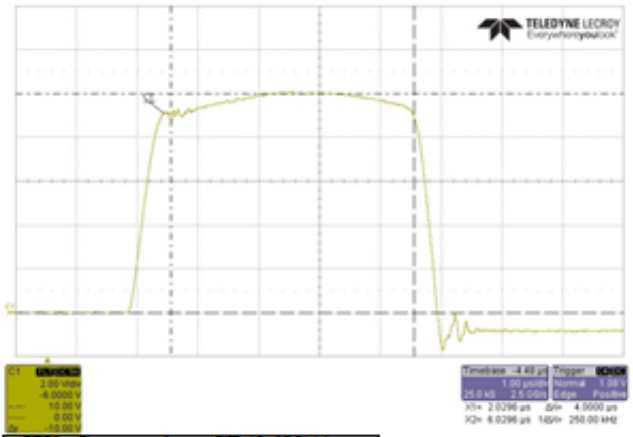

Figure 4 Low Energy Output Current for Magnetron

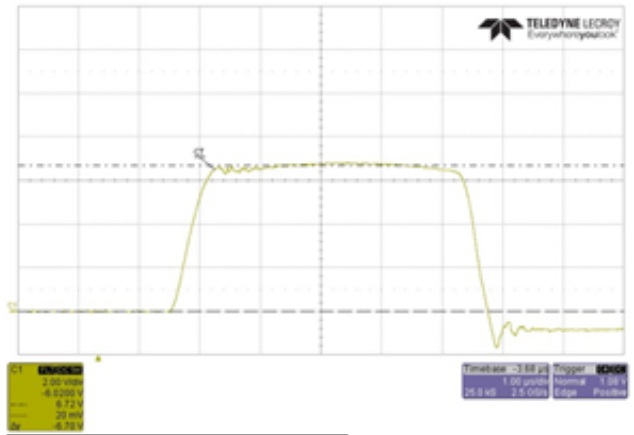

RUNBACK

- Voltage or Current regulation
- Linearized between XX points
- Power calculated from a fixt peak-power value times PRF times pulse length

Heater Voltage Reduction Schedule

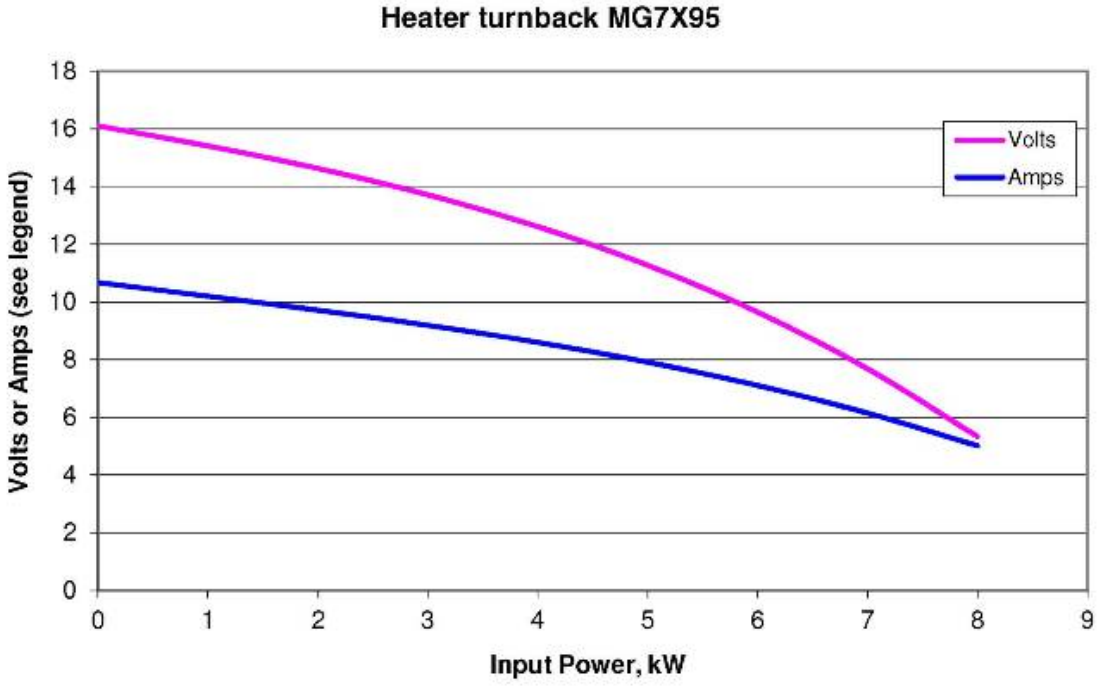

ARC RECOVERY FUNCTION

- Three parameters are controlling
  - How many arcs before a reaction
  - Shortest pulse after arc
  - Increase for each pulse
- Saves Magnetron

GUI MAIN PAGE

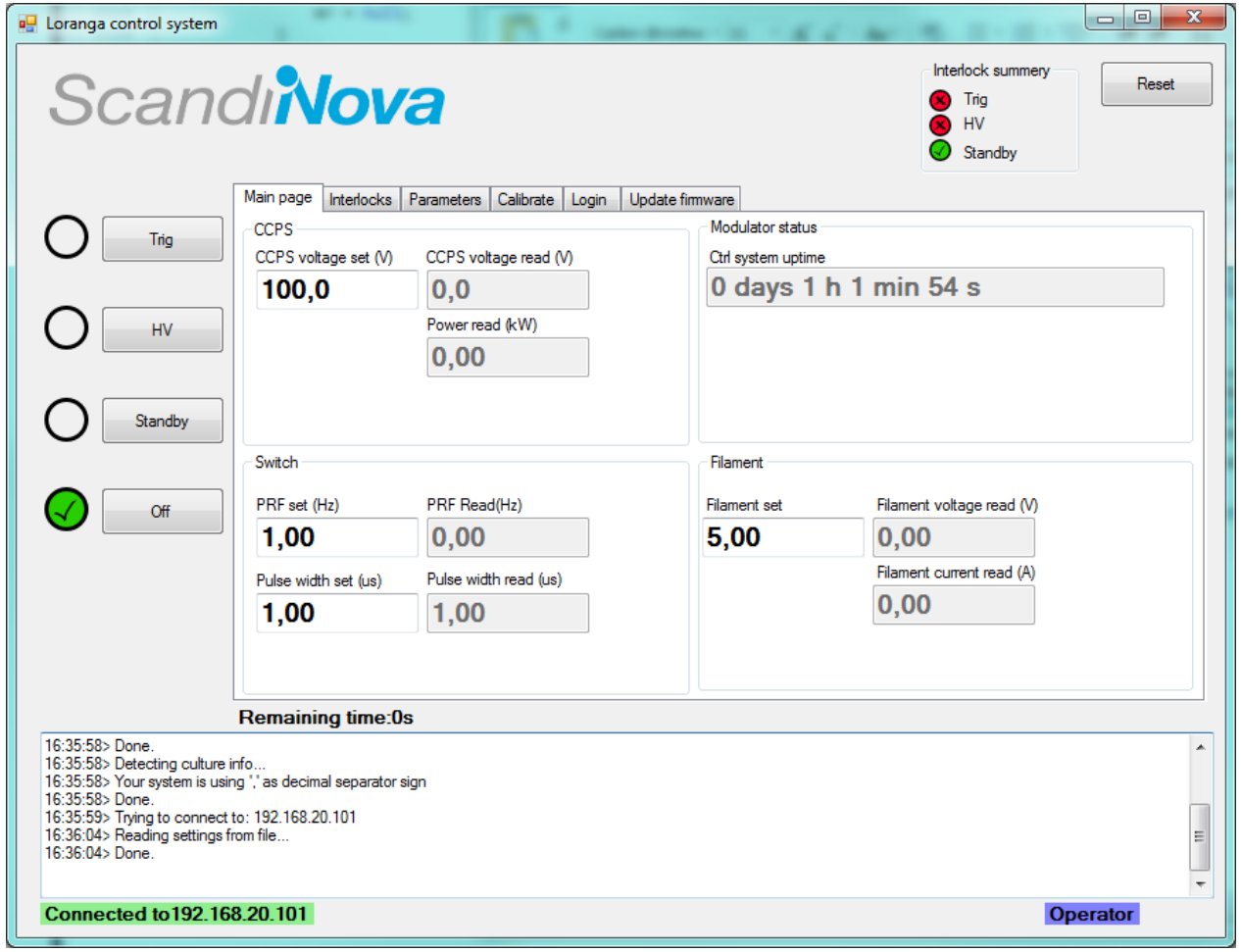

INTERLOCK TAB

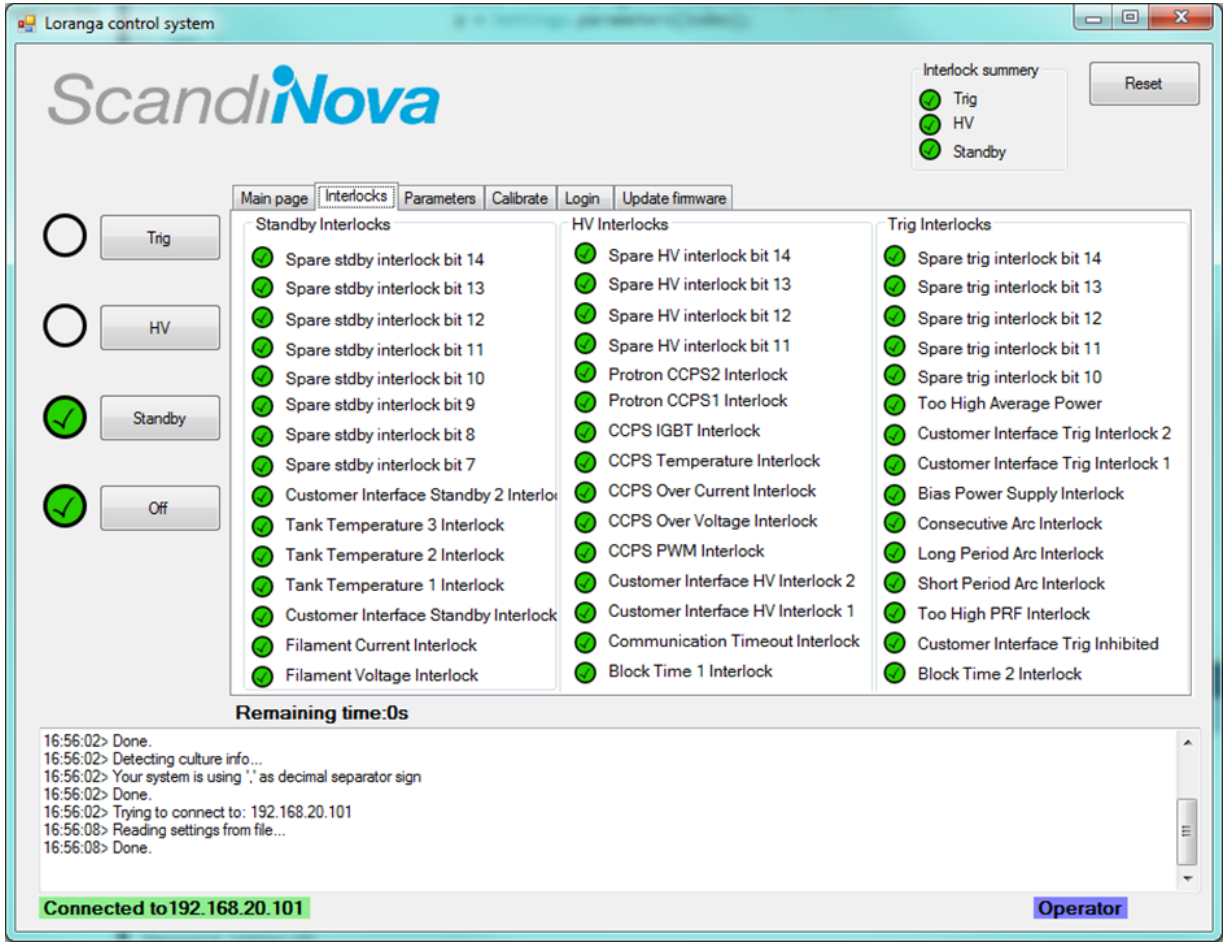

PARAMETERS

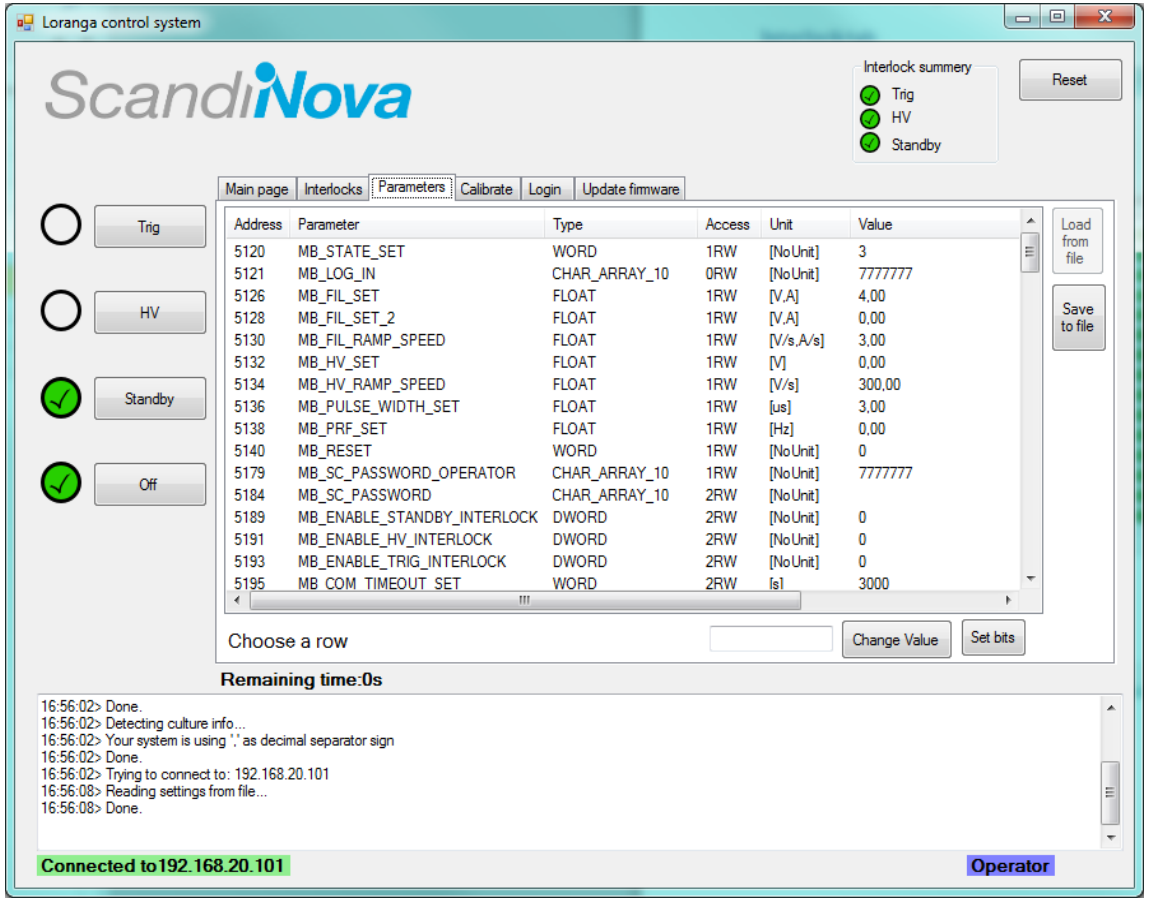
Loranga control system
ScandiNova
Interlock summery
Trig
HV
Standby
Reset
Main page
Interlocks
Parameters
Calibrate
Login
Update firmware
Trig
HV
Standby
Off
Address Parameter Type Access Unit Value
5120 MB_STATE_SET WORD 1RW [No Unit] 3
5121 MB_LOG_IN CHAR_ARRAY_10 0RW [No Unit] 7777777
5126 MB_FIL_SET FLOAT 1RW [V,A] 4,00
5128 MB_FIL_SET_2 FLOAT 1RW [V,A] 0,00
5130 MB_FIL_RAMP_SPEED FLOAT 1RW [V/s,A/s] 3,00
5132 MB_HV_SET FLOAT 1RW [V] 0,00
5134 MB_HV_RAMP_SPEED FLOAT 1RW [V/s] 300,00
5136 MB_PULSE_WIDTH_SET FLOAT 1RW [us] 3,00
5138 MB_PRF_SET FLOAT 1RW [Hz] 0,00
5140 MB_RESET WORD 1RW [No Unit] 0
5179 MB_SC_PASSWORD_OPERATOR CHAR_ARRAY_10 1RW [No Unit] 7777777
5184 MB_SC_PASSWORD CHAR_ARRAY_10 2RW [No Unit]
5189 MB_ENABLE_STANDBY_INTERLOCK DWORD 2RW [No Unit] 0
5191 MB_ENABLE_HV_INTERLOCK DWORD 2RW [No Unit] 0
5193 MB_ENABLE_TRIG_INTERLOCK DWORD 2RW [No Unit] 0
5195 MB_COM_TIMEOUT_SET WORD 2RW [s] 3000
Load from file
Save to file
Choose a row
Change Value
Set bits
Remaining time:0s
16:56:02> Done.
16:56:02> Detecting culture info...
16:56:02> Your system is using ',' as decimal separator sign
16:56:02> Done.
16:56:02> Trying to connect to: 192.168.20.101
16:56:08> Reading settings from file...
16:56:08> Done.
Connected to192.168.20.101
Operator

CALIBRATE

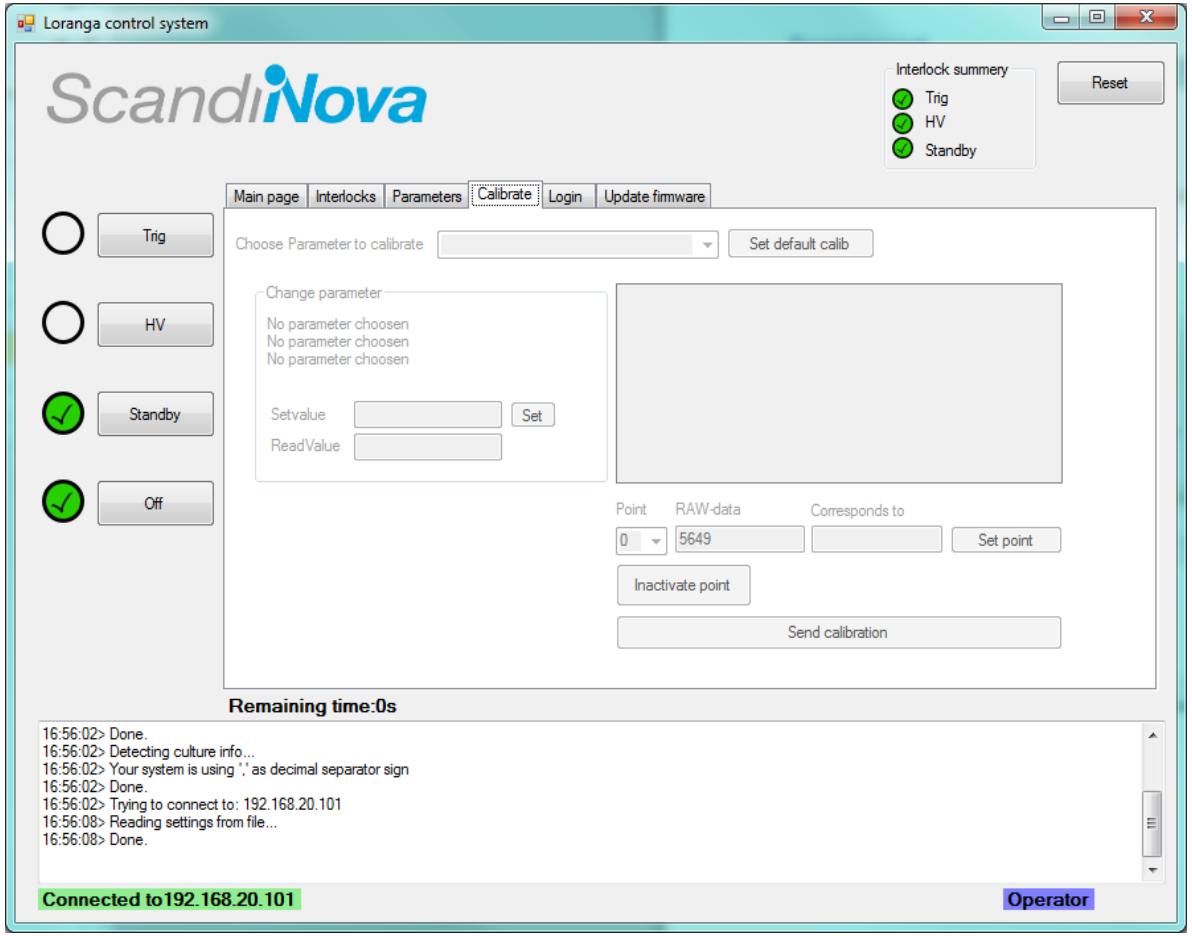
Loranga control system
ScandiNova
Interlock summery
Trig
HV
Standby
Reset
Main page
Interlocks
Parameters
Calibrate
Login
Update firmware
Trig
HV
Standby
Off
Choose Parameter to calibrate
Set default calib
Change parameter
No parameter choosen
No parameter choosen
No parameter choosen
Setvalue
Set
ReadValue
Point
RAW-data
Corresponds to
0
5649
Set point
Inactivate point
Send calibration
Remaining time:0s
16:56:02> Done.
16:56:02> Detecting culture info...
16:56:02> Your system is using ',' as decimal separator sign
16:56:02> Done.
16:56:02> Trying to connect to: 192.168.20.101
16:56:08> Reading settings from file...
16:56:08> Done.
Connected to192.168.20.101
Operator

LOGIN

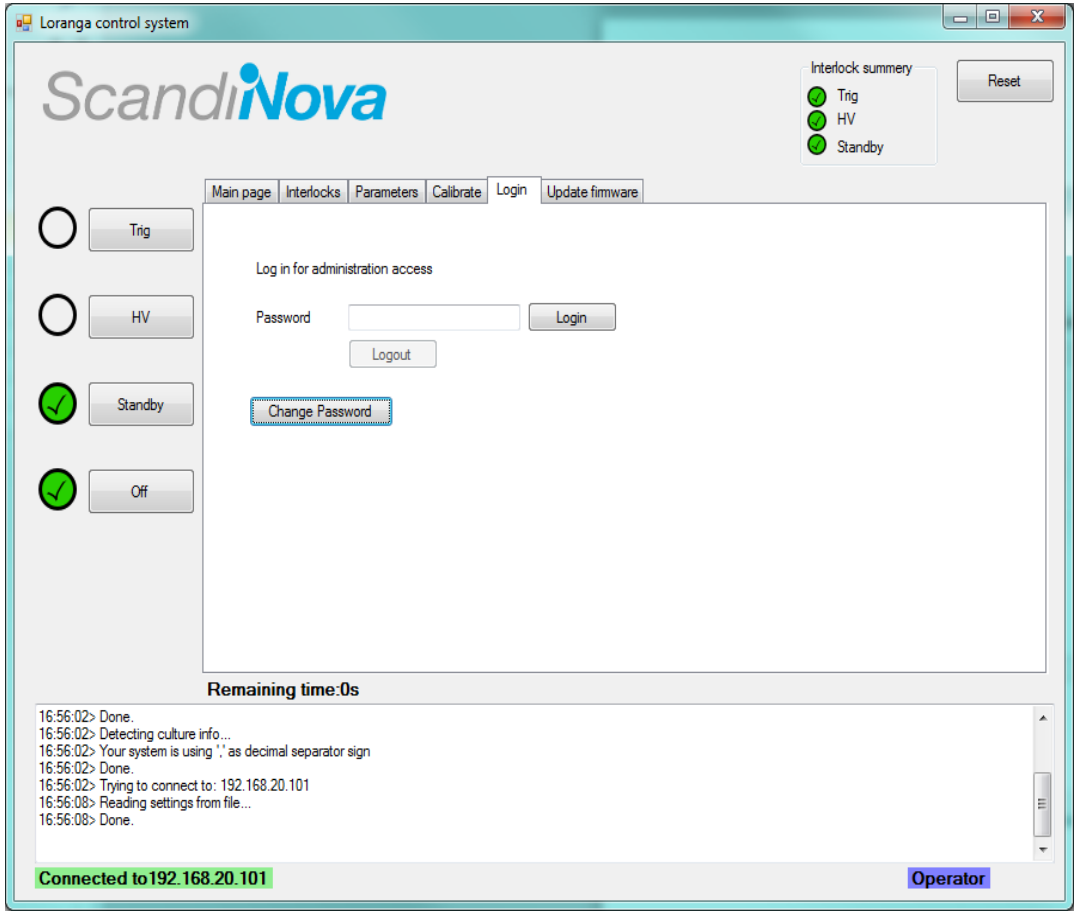
Loranga control system
ScandiNova
Interlock summery
Trig
HV
Standby
Reset
Main page
Interlocks
Parameters
Calibrate
Login
Update firmware
Trig
HV
Standby
Off
Log in for administration access
Password
Login
Logout
Change Password
Remaining time:0s
16:56:02> Done.
16:56:02> Detecting culture info...
16:56:02> Your system is using ',' as decimal separator sign
16:56:02> Done.
16:56:02> Trying to connect to: 192.168.20.101
16:56:08> Reading settings from file...
16:56:08> Done.
Connected to192.168.20.101
Operator
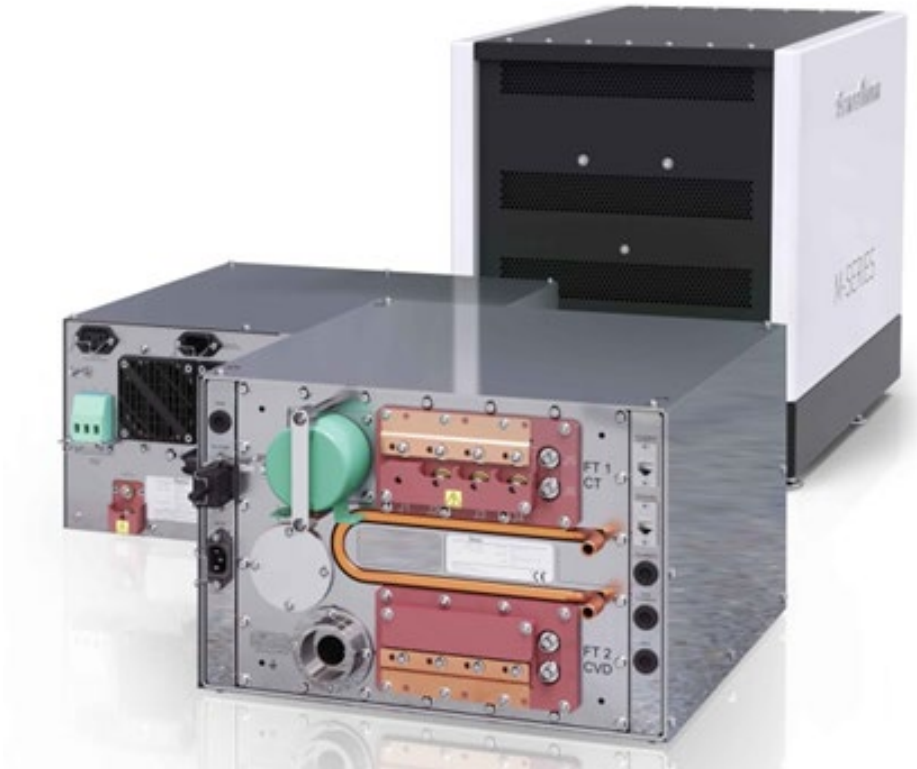
TACK!