KLYSTRON MODULATORS

ScandiNova Systems

User's Meeting Webinar

2020-05-07

Presented by:

Mikael Lindholm (Founder, VP Sales & Marketing)

THE SOLID STATE CONCEPT

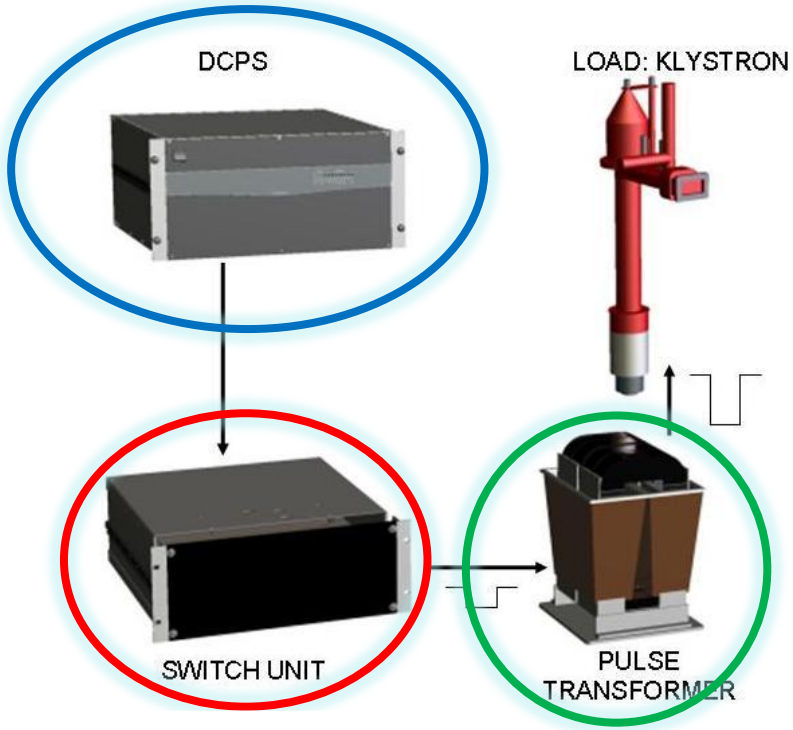

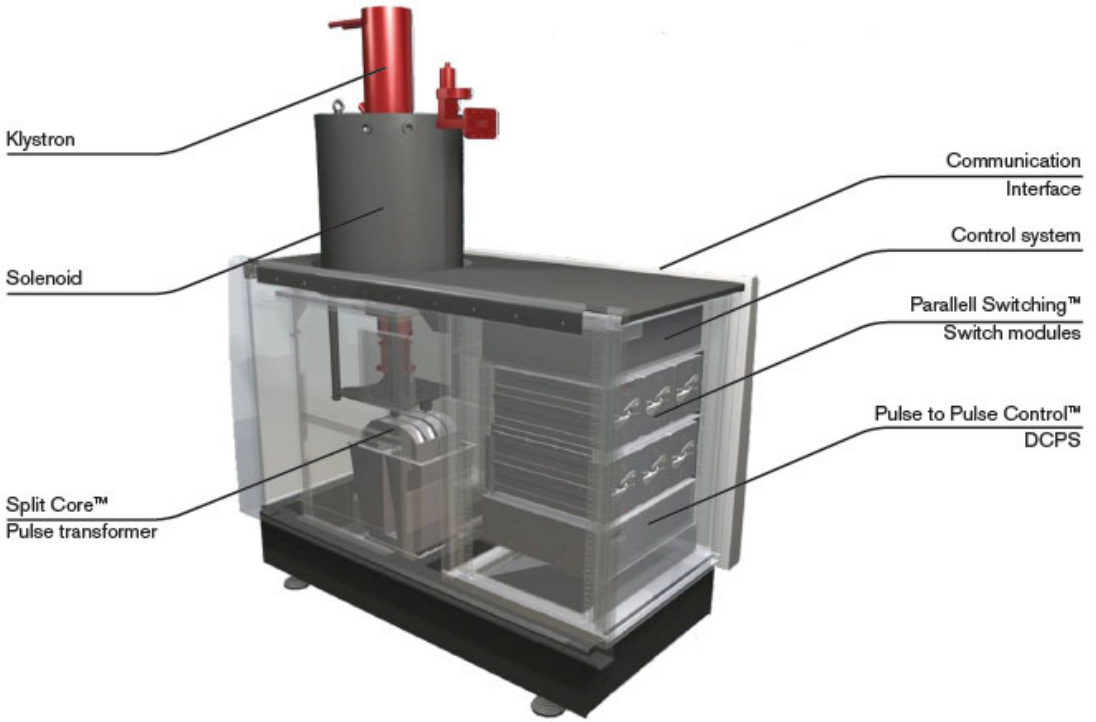

THE POWER CIRCUIT

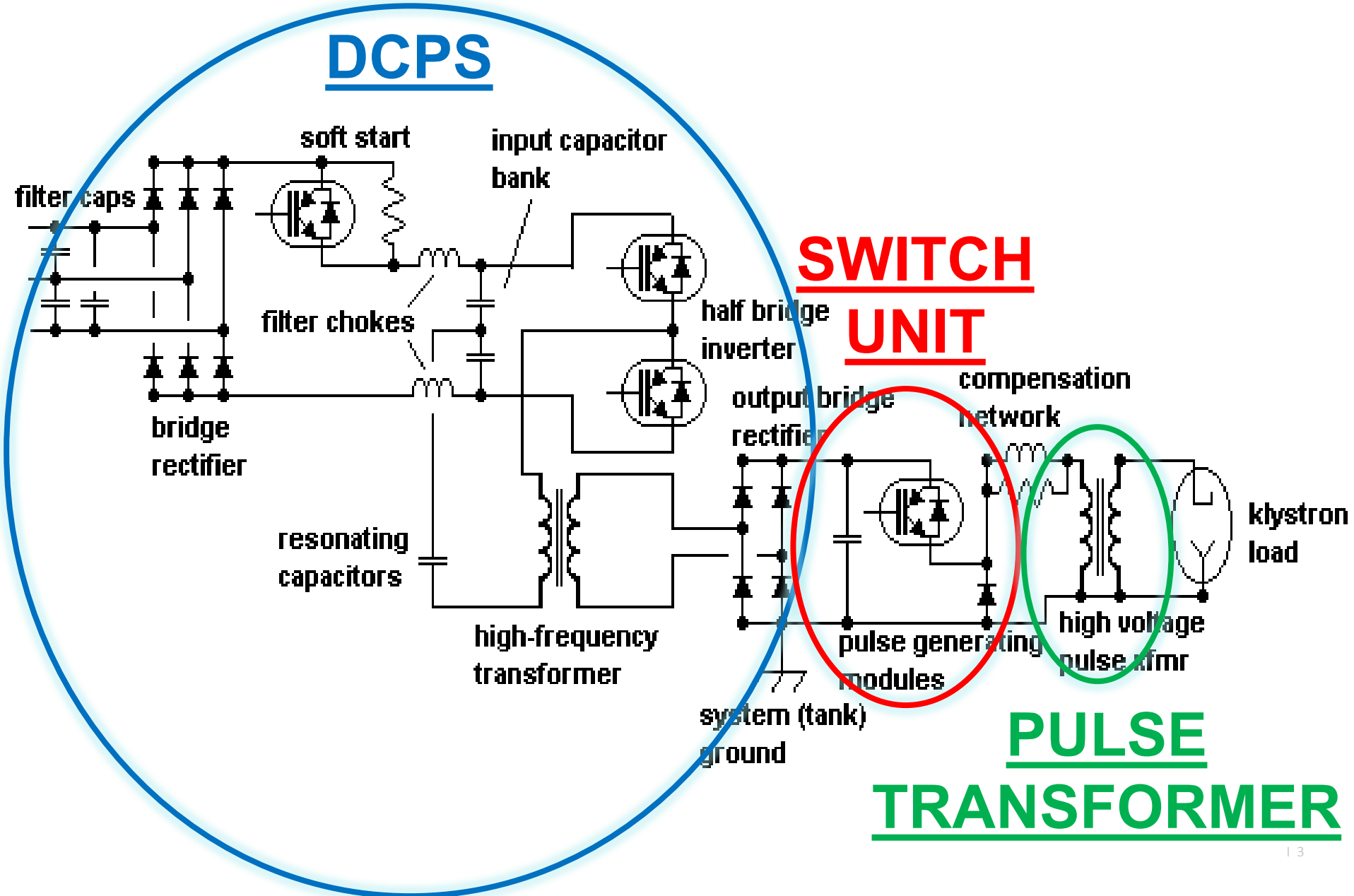

RF UNIT SYSTEM ILLUSTRATION

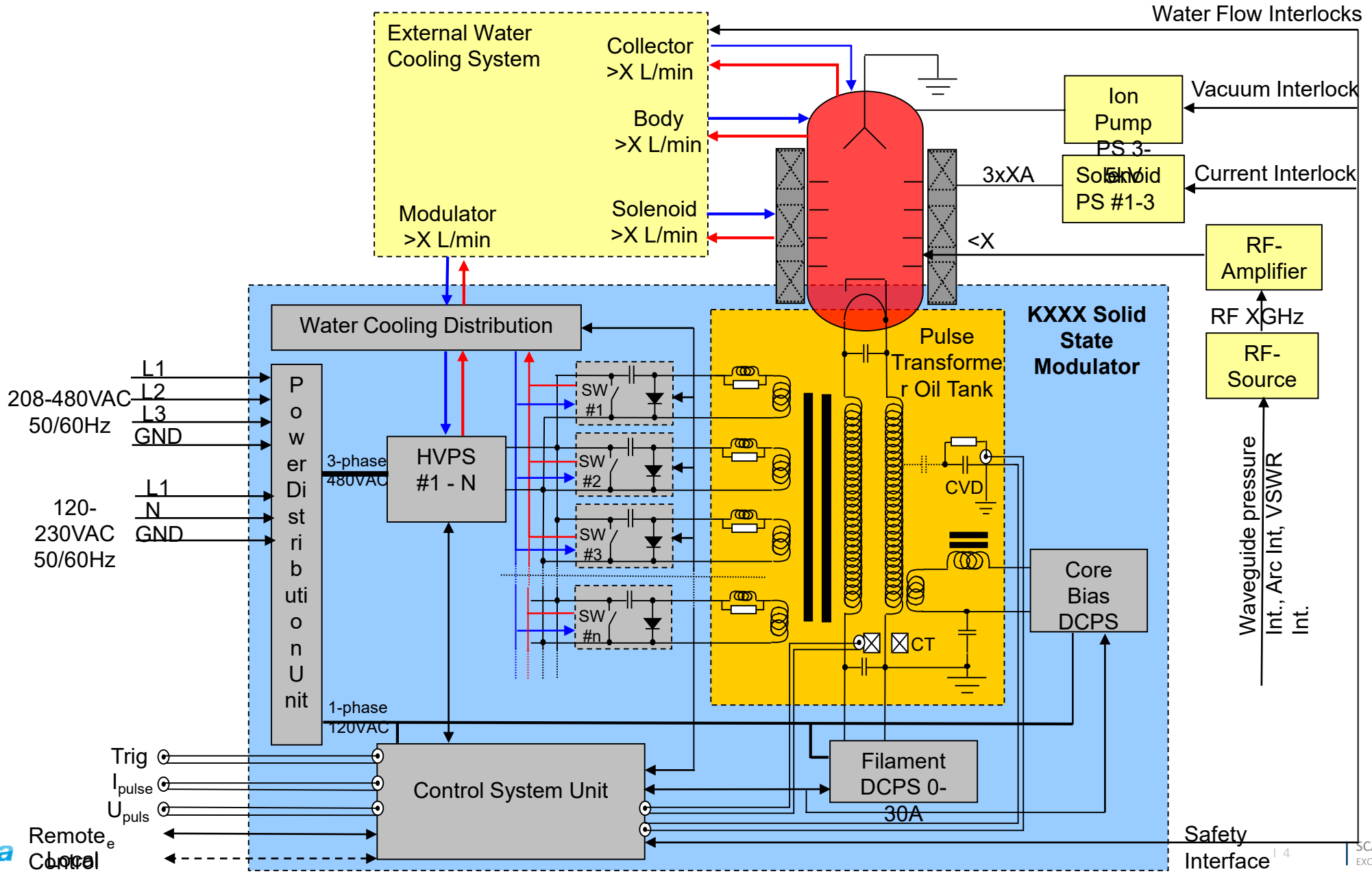

A COMPLETE RANGE OF STANDARD PLATFORMS FOR KLYSTRONS

3-10MW 7.5-35MW 25-50MW 40-60MW 50-100MW

K300 FRONT/SIDE VIEW

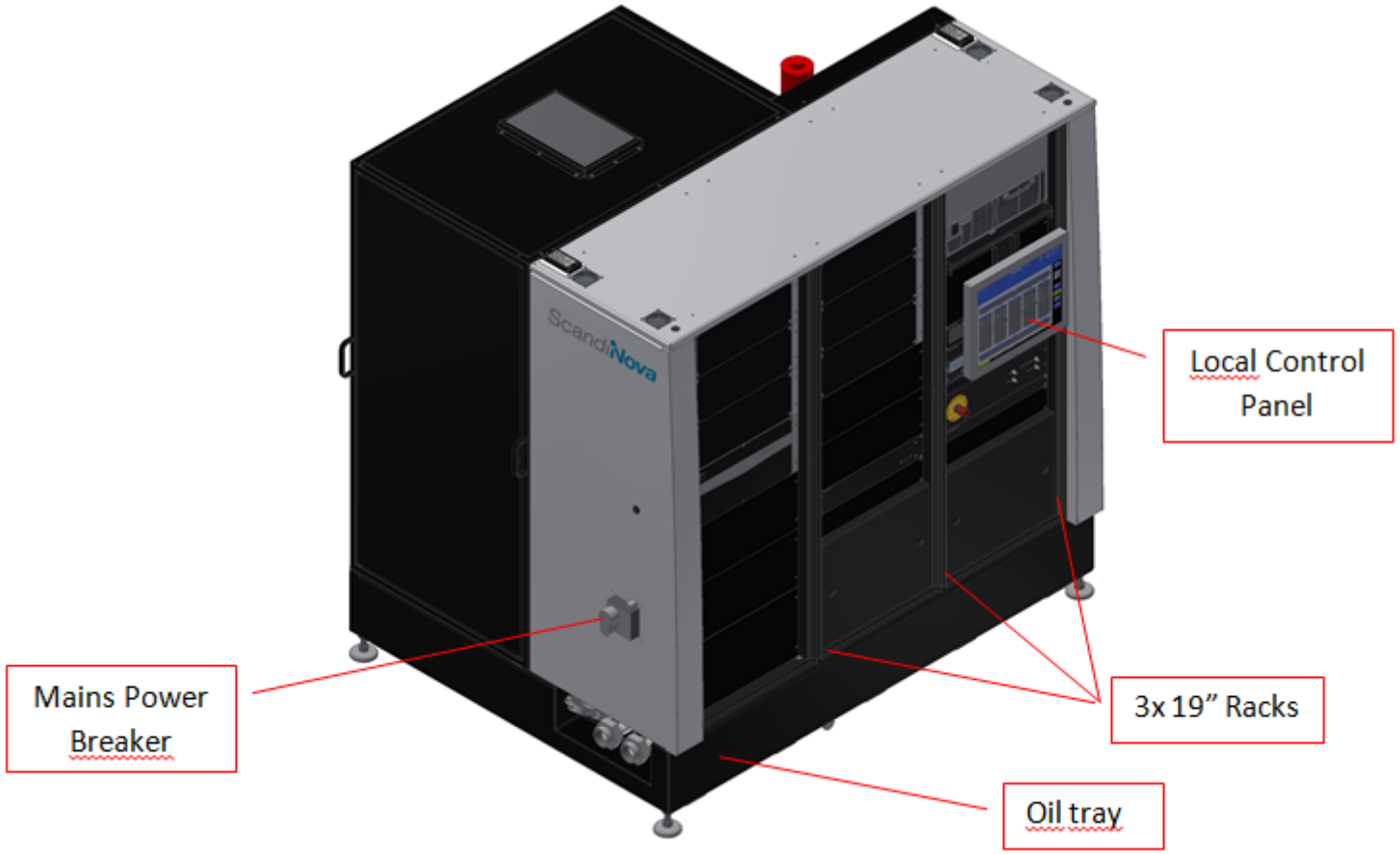

K300 FRONT VIEW

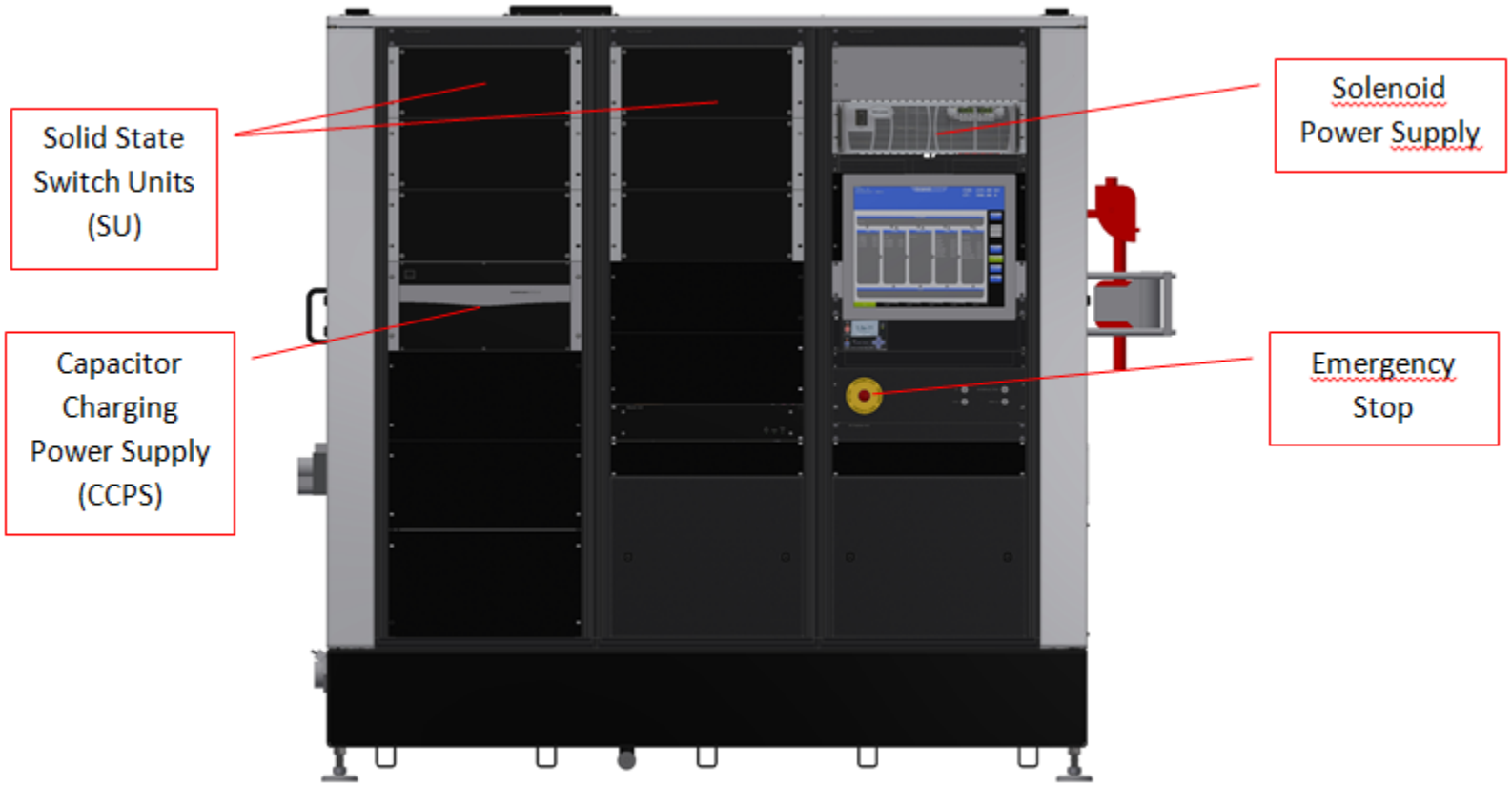

K300 REAR/SIDE VIEW

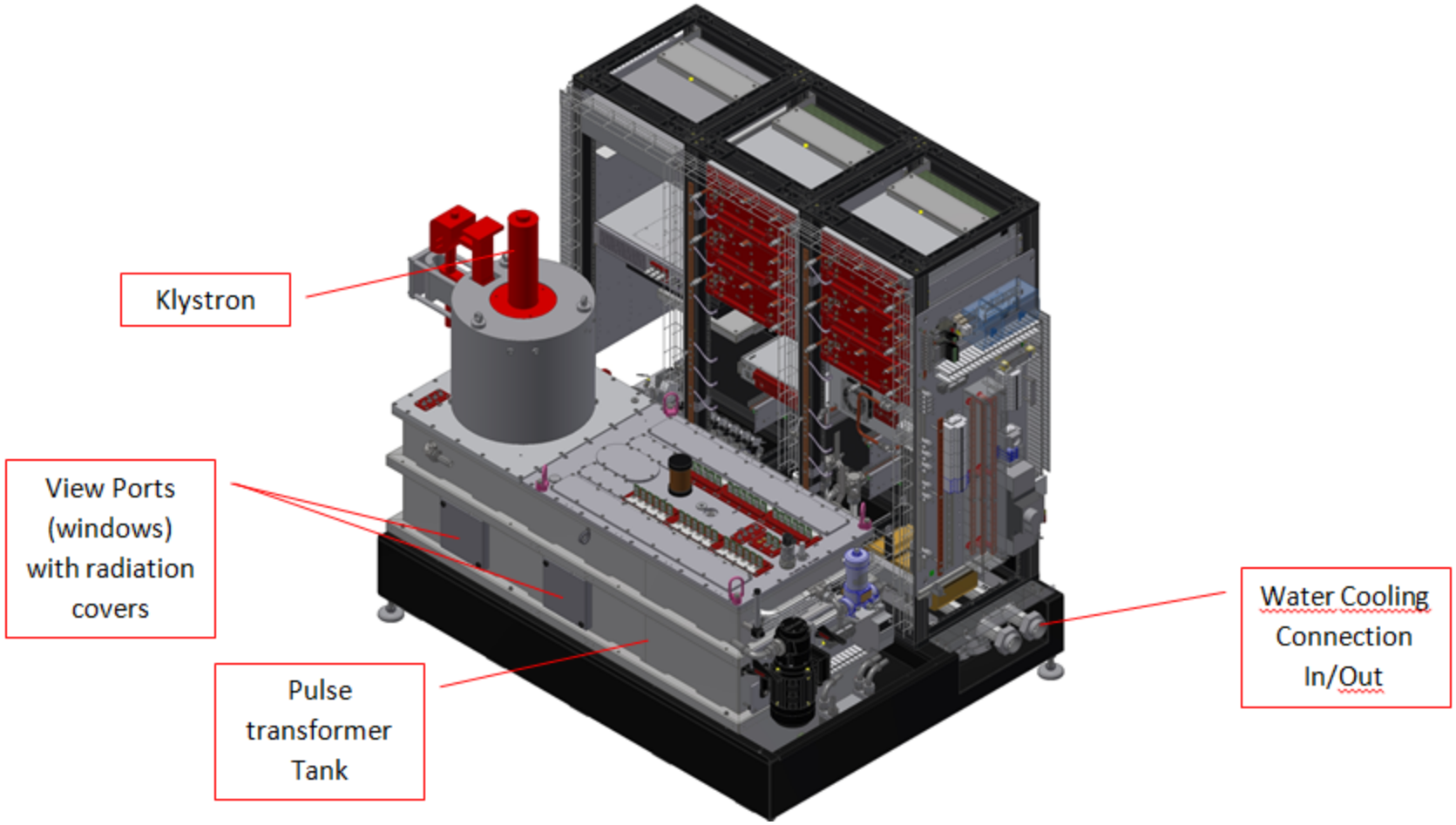

K300 LEFT SIDE VIEW

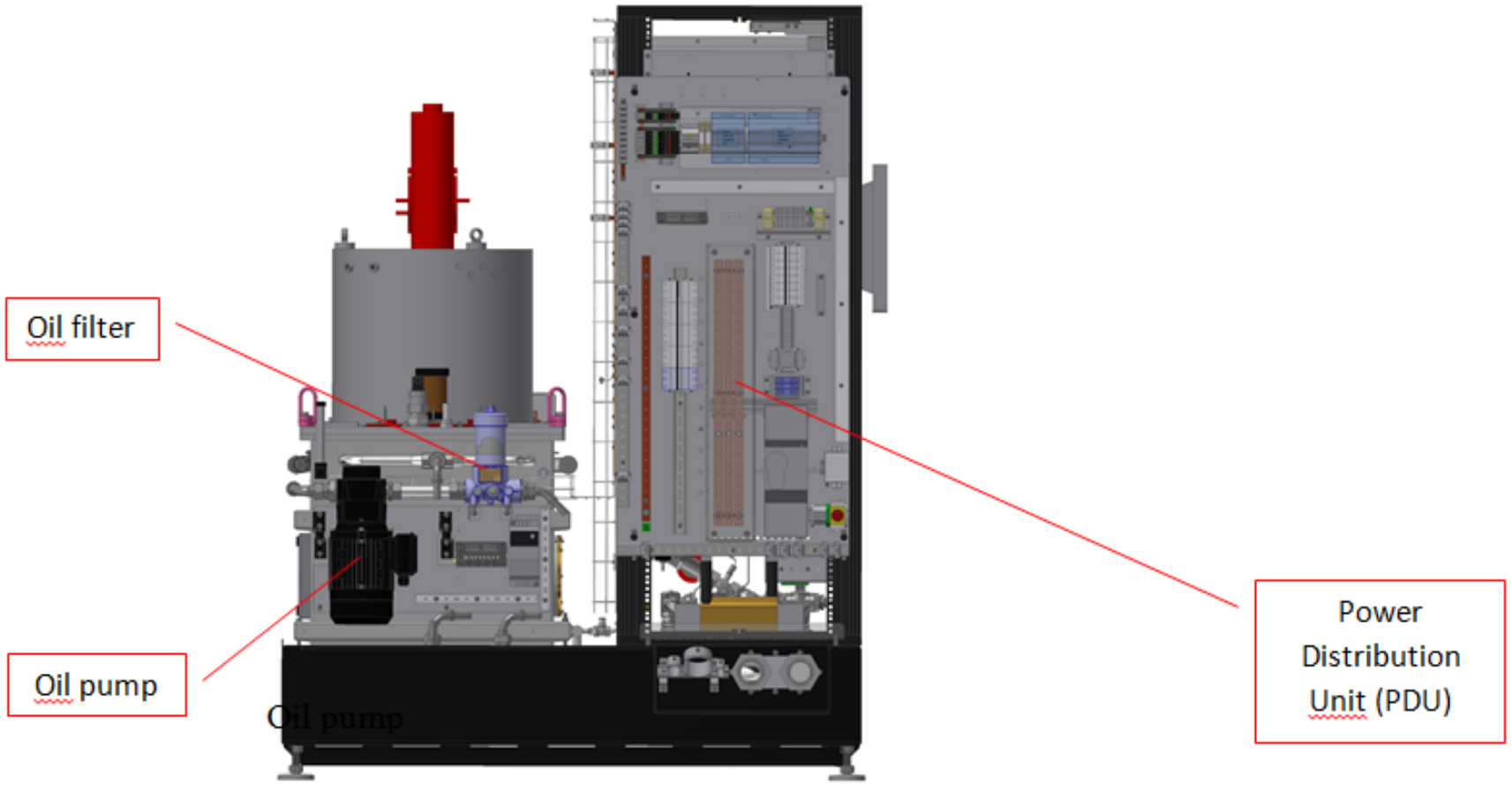

RIGHT SIDE VIEW

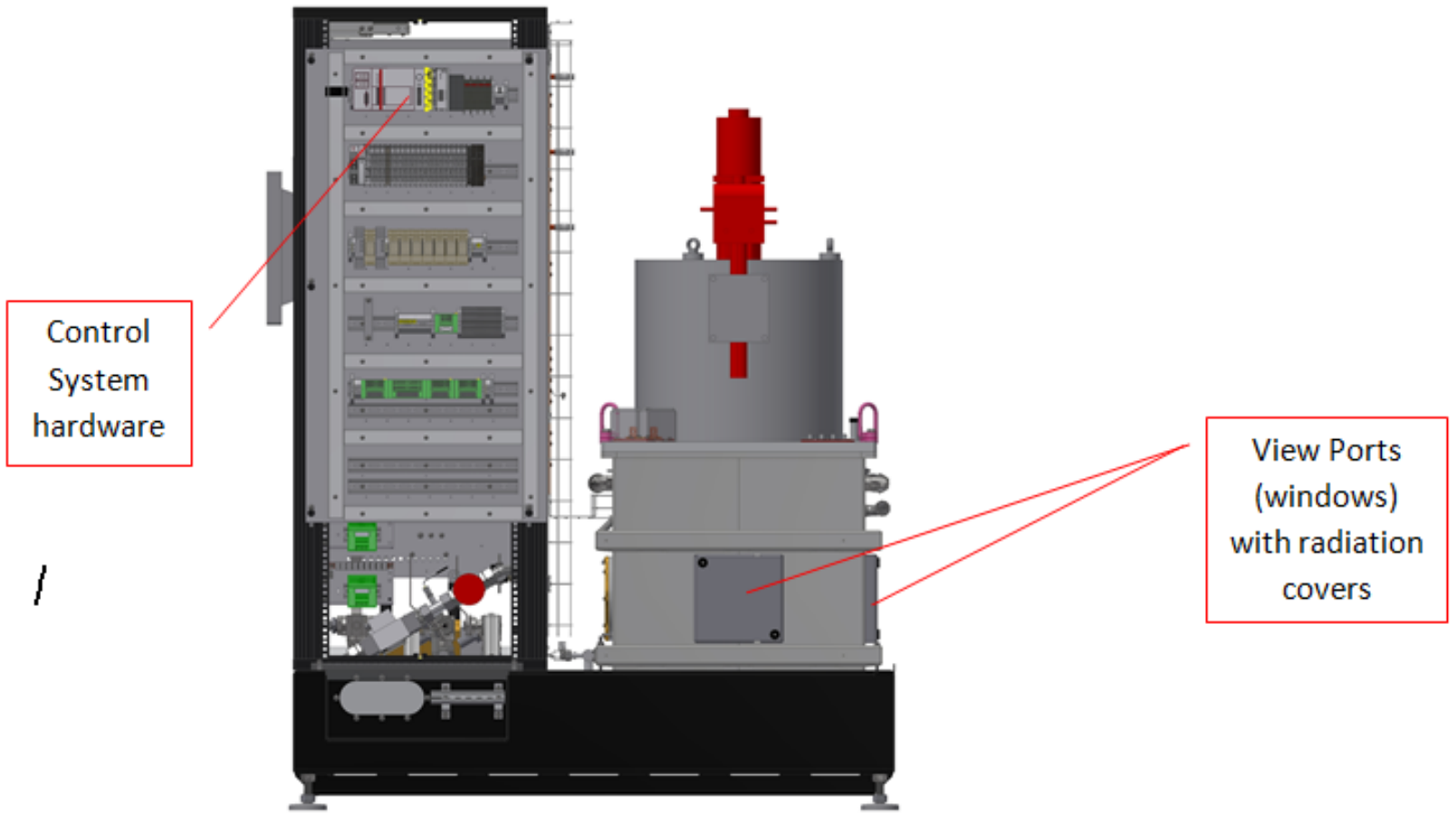

K300 REAR SIDE VIEW

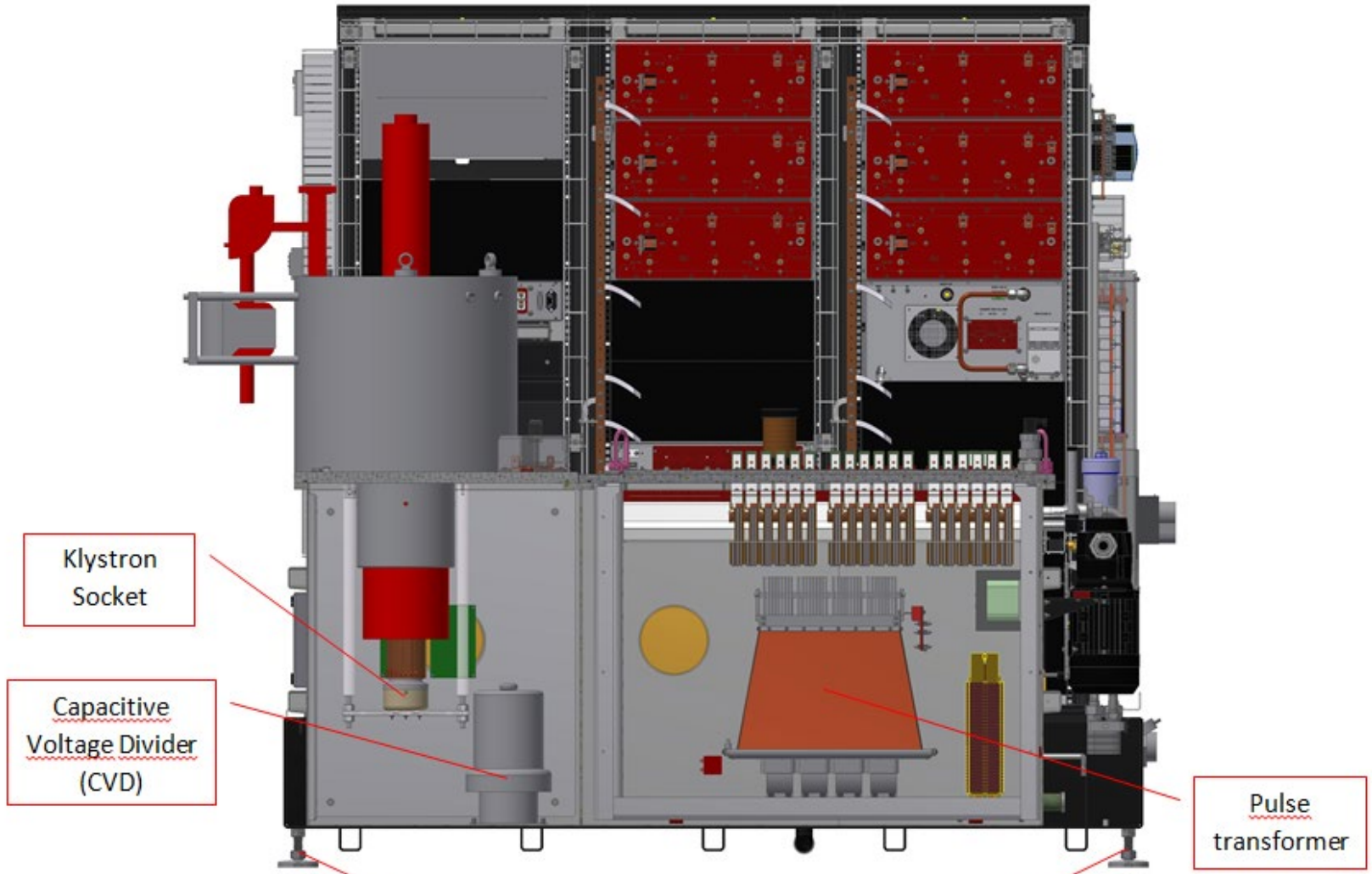

LOAD IMPEDANCE & PULSE SHAPE

- Klystron Impedance $Z = \frac{U}{I}$
- Rise time $t \sim 2.2 \frac{L}{Z}$
- Pulse droop $\frac{U}{Uo} = e^{-t/(RC)}$

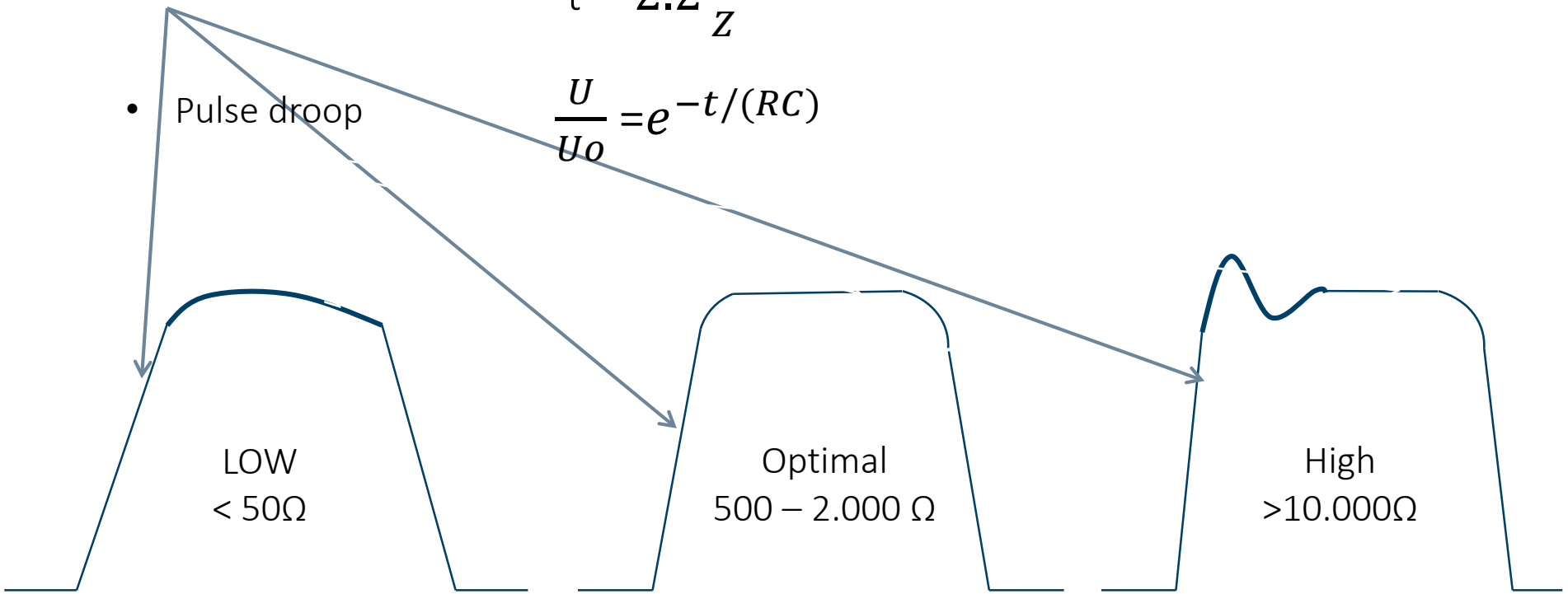

CONTENTS OF A KLYSTRON RF UNIT

- Modulator Platform K050-500
- Klystron & Solenoid
- Radiation shielding (1-3uSV/hr)
- Solenoid PS
- Ion Pump PS
- Filament PS
- Cooling of Klystron (collector, body, window)
- Cooling of solenoid
- Internal/external RF source
- RF drive amplifier
- RF diagnostics (directional couplers)
- Waveguide system (waveguides, circulator, loads, arc detector, waveguide window, seals etc)

DIAGNOSTICS OF A KLYSTRON RF UNIT

- HVDC input
- Klystron Voltage/current
- Filament Voltage/current
- Solenoid Voltage/current
- Ion Pump Voltage/current
- Flow Cooling of Klystron (collector, body, window)
- Flow Cooling of solenoid
- Internal/external RF source output power
- RF drive amplifier output power
- Klystron RF output Forward/Relected power
- Waveguide system (waveguides, circulator, loads, arc detector, waveguide window, seals etc)
  - Flow cooling loads/window
  - Waveguide pressure/vaccum
  - Arc intelock signal

COMPACT K050 -SYSTEM FOR RF 3-5MW

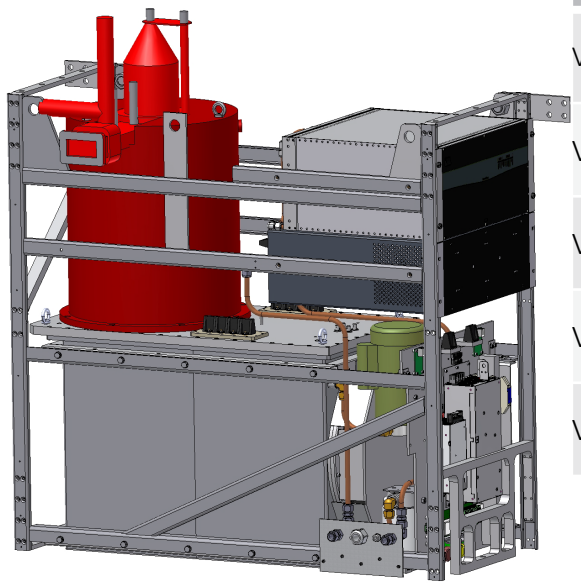

CPI	Thales	Canon	Toriy
VKS-8262HS	TH2157	E37201	K168
VKS-8262D	TH2163	E3734	K-273
VKS-8262J	TH2165	E3779	
VKS-8262M		E3775	
VKS-8262S		E3787	

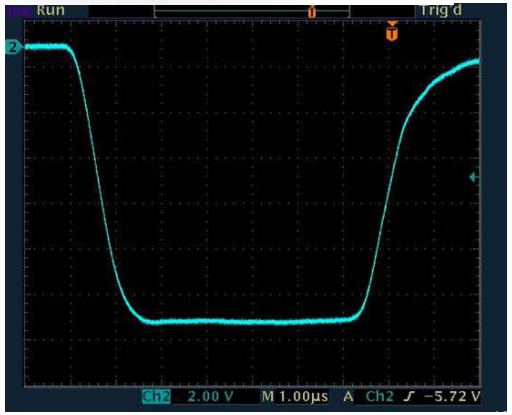

Exampel:

RF: 5 MW / 5kW

Modulator: 12MW / 12kW

Configuration:

1x CCPS

1x SWU

135kV / 92 A / 4.5us / 300 Hz

K100-SYSTEM RF 3-10MW

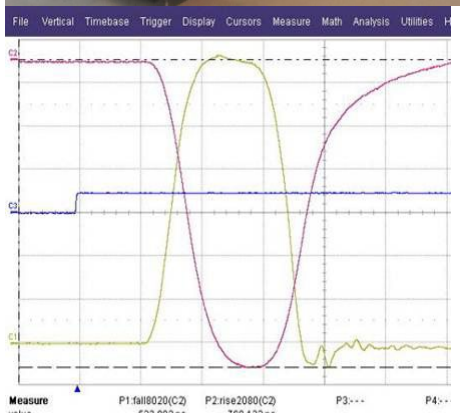

127kV / 99 A / 1us / 1000 Hz

CPI	Thales	Canon
VKS-8262E	TH2157A	E3772
VKS-8262G	TH2157A1	E3779
	TH2157A2	E3779A
	TH2163A	

Exampel:

RF: 10 MW / 10kW

Modulator: 25MW / 27kW

Configuration:

2x CCPS

2x SWU

K200-SYSTEM RF 6-35MW

Thales	Toshiba	Mitsubishi Electric
TH2128E	E3754	PV-9010
TH2130	E3776	
TH2170	E37113	
TH2171	E37115	
TH2172		

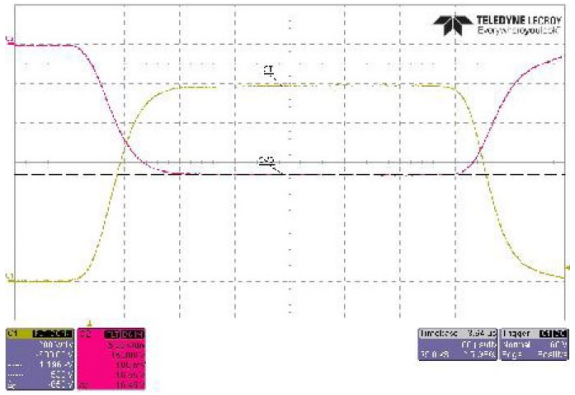

152kV / 99 A / 5us / 400 Hz

Exampel:

RF: 35 MW / 10kW

Modulator: 85 MW / 30kW

Configuration:

2x CCPS

6x SWU

K300-SYSTEM FOR RF10-40MW

CPI	Thales	Canon	Mitsubishi Electric	Toriy
VKS-8262F	TH 2173K	E37306	PV-3030A3	147A
VKS-8262K	TH2100	E37310	PV-3030A4	
	TH2128	E3765A		
	TH2100B	E3729		
	TH2132			

235 kV / 231 A / 7 us / 10 Hz

Exampel:
RF: 40 MW / 20kW
Modulator: 100 MW / 50kW

Configuration:
3x CCPS
8x SWU

K400-SYSTEM FOR RF 35-60MW

Exampel:
RF: 60 MW / 20kW
Modulator:140 MW / 50kW

Configuration:
3x CCPS
10x SWU

CPI	Thales	Canon
VKS-8262P1	TH2100B	E3729
VKS-8311A	TH2128C/D	E3730A
VKS-8311B	TH2158	E3748
	TH2022A	E37202
		E37212

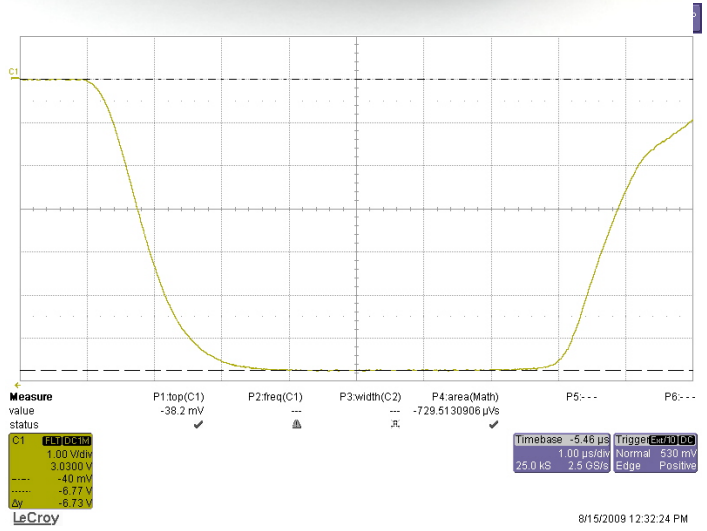

286kV / 290 A / 4us / 100 Hz

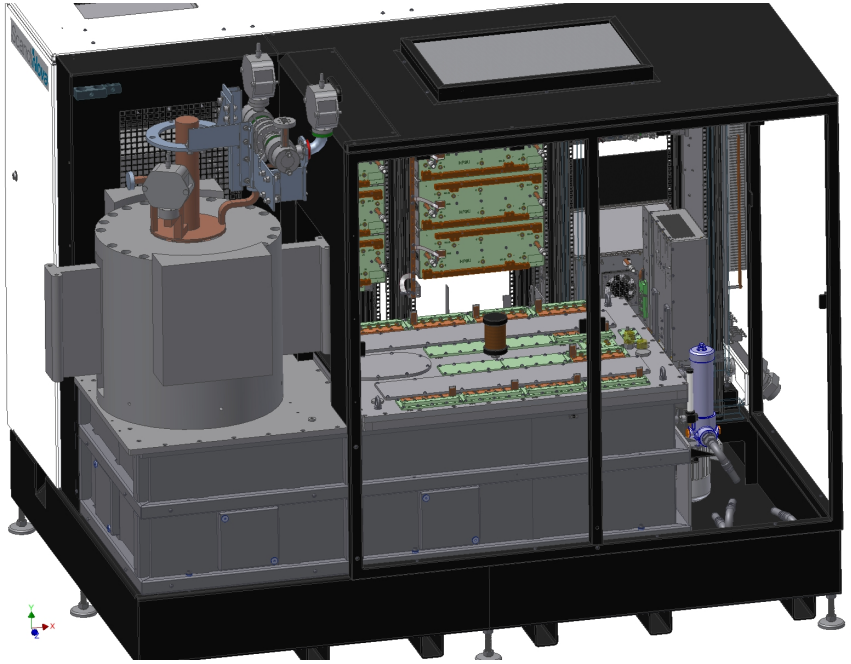

K500-SYSTEM RF 50-80MW

Exampel:

RF: 80 MW / 30kW

Modulator: 200 MW / 85kW

Configuration:

5x CCPS

16x SWU

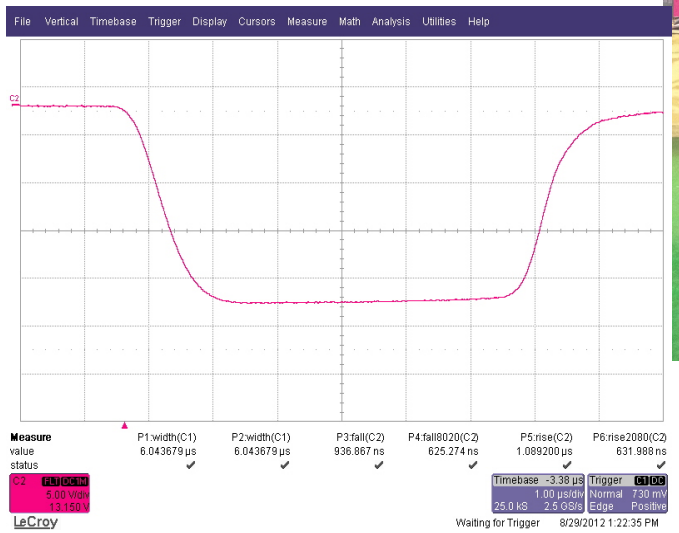

400kV / 500 A / 4.5us / 60 Hz

CPI	Thales	Canon
VKP-7952C	TH1801	E3712
VKS-8262N	TH2104C	E3740A
	TH2104D	E3766
	TH2104U	
	TH2108-1	
	TV2022B	
	TV2022C	

THANK YOU!